03/2022

VM VERLAG
Cologne /Germany

EXTRUSION INTERNATIONAL

EXPERTS IN DOWNSTREAM

Stein Profile Stacker

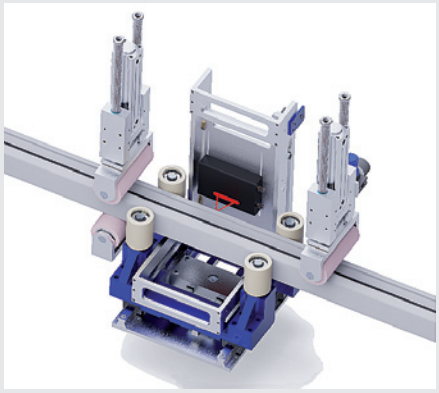

Profile length measurement during extrusion

Measuring sensors are used to determine the length of individual profiles before a profile layer is formed.

The measured length can be used to check and correct the cutting device of the extrusion line or for documentation (quality assurance) of the produced profile lengths.

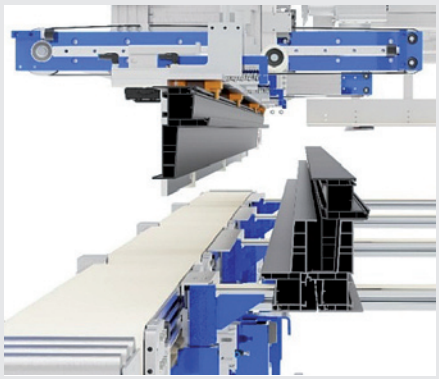

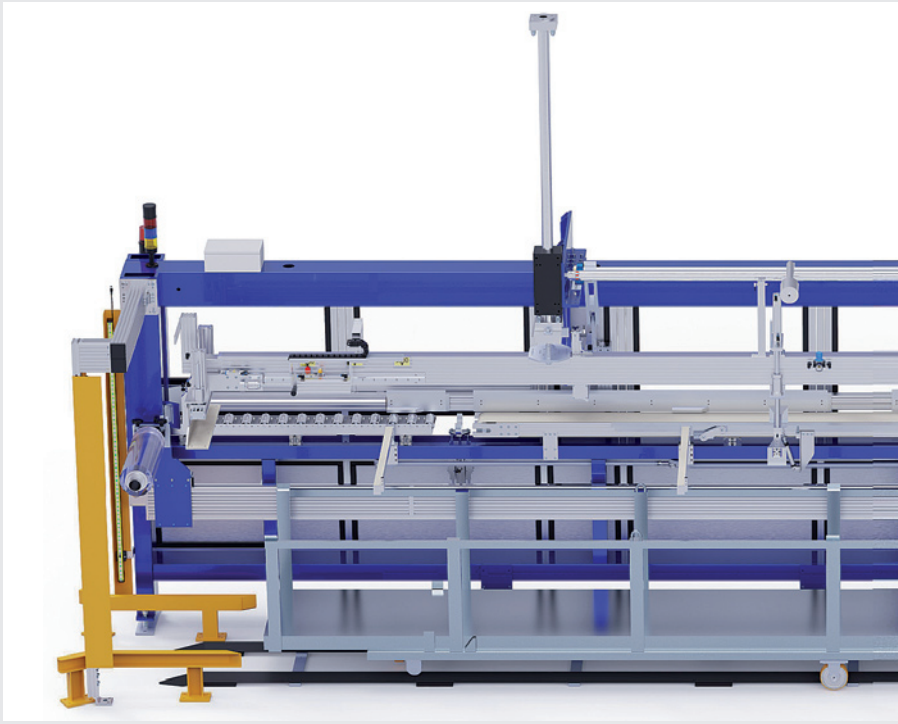

Stacking of special profiles

Stein Maschinenbau offers technical solutions for stacking of heavy and large monoblock profiles.

Based on decades of experience, we can unusual profile geometries or special layer can be evaluated for their automated stacking.

Cassette spreader

With the help of a cassette spreader it is possible to realise the same packing density of the manual packaging.

Made in Germany

EQUIPMENT FOR EXTRUSION

Stein Profile Stacker

Weight determination during extrusion

With the help of special weighing units, individual profiles can be weighed before a profile layer is formed.
The determined weight can be used to optimise the extrusion.

As a specialist in the field of special machine construction, we always find a solution!

Cassette handling

The handling system allows empty cassettes to be fed into the automatic stacker and the filled cassettes to be pushed out.

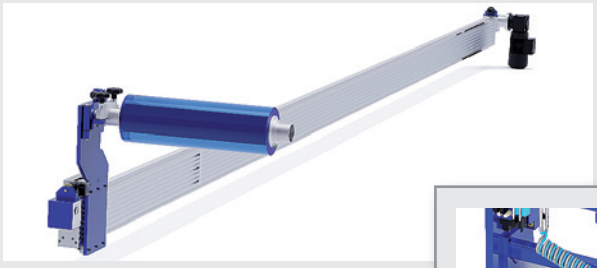

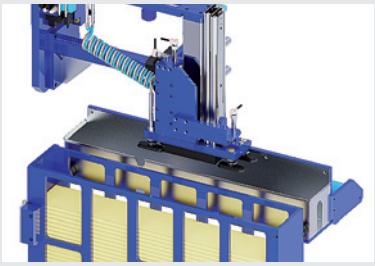

Profile interlayer

Endlessly laid as a foil between the profile layers or with individual strips laid on the layer.

STEIN Maschinenbau GmbH & Co. KG

Wartbachstrasse 9
66999 Hinterweidenthal/Germany
Tel. (+49) (0)63 96-9215-0
Fax (+49) (0)63 96-9215-25
stein@stein-maschinenbau.de
www.stein-maschinenbau.de

Firms in this issue 6
Imprint 7
Industry News 8
Calendar 8
70 Years of K in Düsseldorf 8
CHINAPLAS – Postponed to 2023 in Shenzhen 9
28th Fakuma – Booking Levels Already High 10
Trends in Fire Safety Conference 10
„We are plastics“ 11
wire 2022 and Tube 2022 in Düsseldorf 12
Joining UN Global Compact 13
First General Assembly – Start fort he R-Cycle Community 14
Interplas 2023 15
New R&D Centre for Innovative Recycling Technologies 16
Appointment 16
Positive 2021 Balance Sheet and Encouraging Outlook for 2022, Although not without Some Uncertainty for Italien Manufacturers of Plastics and Rubber Processing Machinery 17
New TV Format 18
Sustainable Plastic Sourcing Platform 18
Market Study: Pigments 18
Recycling 19
Calling on the Circular Economy to Drive Closed Loop Food Packaging 19
World's First Dedicated Production Line for Sustainable and Floatable Shrink Sleeve Film Opened in Poland 20
Foundation Sets Up Its First Recycling Plant in Maharashtra, India 20
Acquisition 21
Continued Growth with a New CFO 21
Mourning for Company Co-Founder Georg Wendelin 22
Expanded Portfolio of DURACON® POM Products Highlighted 22
Four Recycling Systems to Thailand 23
Enzymatic Depolymerization in PET/PVDC Barrier Film 23
Recyclable Packaging for Liquid Soap 24
Plastimagen México – Restaint in the Field of Recycling 24
New 500 Series Rubber/Silicone Extrusion Crosshead 25
New Inner Diameter HVOF Coating for Oil & Gas Industry Launched 25
Recyclable All-PE Film with Digital Product Passport 26
Innovations in the Rubber Industry 27
Reusable To-Go Mugs 27
Innovative and Sustainable Measuring and Control Technologies 28
X-ray Operating System for Non-Destructive Testing 28
Spotlight on Technology for the Regeneration of Plastics 29
Plastics Recycling Awards Europe 30
New Engineering Plastic Fine Powders 30
Innovative Solutions for the Gentle and Clean Processing Rubber- and Silicone Compounds at Expobor 2022 31
Making the Plastic Circularity a Reality 31
Measuring Technology
Quick and Reliable Detection of Surface Defects on the Cooled Tube or Pipe 32
Extrusion Coating
EFSA-Compliant Process Produces Food-Safe Sheet from PET Recyclate 33
Plastics Packaging
Push Tab® blister Lid Launched 34
Circular Economy
Another Life for Used FFP2 Face Masks 35
Extrusion Technologies, Recycling
Innovative Extrusion Technologies fort he Closed Recycling Loop 36
Recycling
Plastic Washing System for National Test Centre 38
Recycling – Case Study
Ghost(net)buster in the Netherlands 40
Compounding Extruder
Customized Production Lines for High-Tech Compounds 42
Measuring Technology
Laser Measurement of Tubes and Extruder Bore Holes 44
Recycling
Recycling Technology from Austria for Australia's Largest PET Recycling Plant 46
Extrusion Technology
Reduced Energy Consumption in Honeycomb Production by up to 65 Percent and Double Capacity 48
Periphery
Flawless Granulates for the Highest Optical Requirements 50

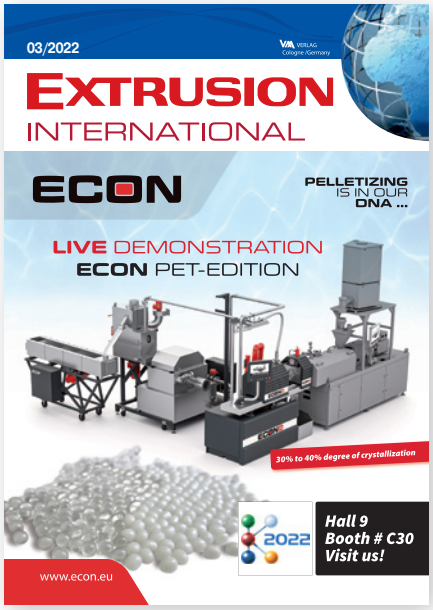

Cover:
ECON – Pelletizing is in our DNA
ECON specializes in the development, production and global marketing of innovative solutions for underwater pelletizing technology and screen changers. ECON has secured numerous patents since its establishment in 1999. International producers of raw materials, compound and masterbatch manufacturers and recycling companies value the quality and efficiency of ECON machines. ECON underwater pelletizers feature the leading "thermal insulation" technology, offering significant advantages over conventional systems. The insulation prevents the heat flow into the process water, which saves energy. At K 2022 ECON presents the ECON PET-Edition - which is designed for pelletizing of PET and rPET - in a live demonstration (Hall 9, Booth # C30). With use of the ECON PET-Edition, a degree of crystallization of 30% to 40% is achieved.
Products:• (fully automated) Underwater Pelletizing Systems EUP; • Air Pelletizing Systems ELG; • ECON Hybrid EWA; • Pyrolysis Furnaces EPO; • Screen Changers ESK & ESD; • Melt Pumps

ECON GmbH
Biergasse 9 I 4616 Weißkirchen I AT
Visit us at K 2022: Hall 9, Booth # C30
office@econ.eu, www.econ.eu

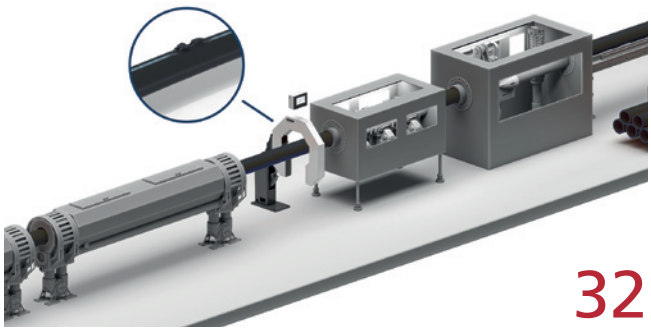

32

Measuring tube and pipe dimensions after the vacuum tank has long been an integral part of comprehensive inline process control. However, a new comparison of product parameters at the end of the extrusion line also offers tube and pipe manufacturers attractive advantages. How to avoid complaints by using SIKORA measuring technology

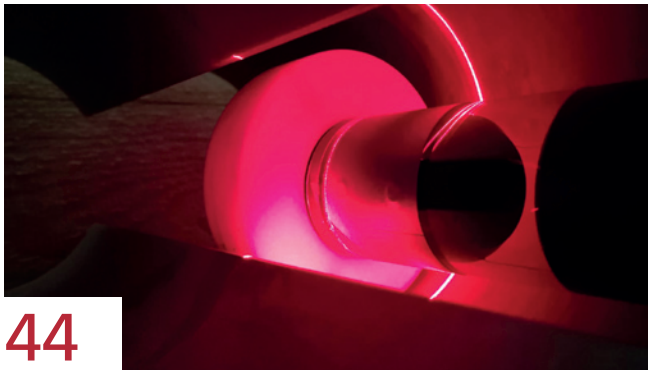

44

Using the Circular Triangulation Sensor, the inner geometry of bores, tubes, tanks, and other cavities can be measured. The radial laser beam measures the inner geometry around 360° in 3600 angle steps. The result is a precise inner cross section, and a 3D-model of the inner surface profile can be generated from the data obtained

Huhtamaki announced a first-to-market sustainable innovation for the global pharmaceutical and healthcare industry. Huhtamaki's Push Tab® blister lid is mono-material PET and free from aluminum. It is designed to meet the stringent safety requirements of highly regulated pharmaceutical and healthcare packaging

34

The recently opened Circular Plastics Australia PET recycling facility in Albury-Wodonga, New South Wales, is equipped with a recoSTAR PET 215 HC iV+ PET bottle-to-bottle recycling line from Starlinger that produces 2.5 tons of rPET per hour

46

Index of **Advertisers,** companies and *fairs* referred in this issue

Adsale	9
A Più	17
BB Engineering	23, 30
BASF Performance Materials	27
Bausano	29
Beier Machinery	19, 41
Borealis	31, 35
Brückner Maschinenbau	18
CCA	13
Carbios	23
Ceresana	18
Chinaplas	9
Davis-Standard	16
Econ	Outside Cover
EconCore	48
EREMA	16, 22
Extreme Coatings	25
Fakuma 2023	10
GL Messtechnik	44
Gneuss	36
Grabher	35
Guill	17, 25
Herbold Meckesheim	24
Huhtamaki	20, 34
Innovia Films	20
Interplas 2023	15
Kiefel	21
Klöckner Pentaplast	19, 34
KraussMaffei Extrusion	42
Lindner Washtech	38
Maag	21
Meaf	48
Messe Düsseldorf	8, 11
Mondi	24
motan–colortronic	7
Nanjing Lesun	41
Pixargus	49
PlasMec	11
Polyplastics	22, 30
R-Cycle	14, 26
Reifenhäuser Blown Film	26
Reifenhäuser Cast Sheet Coating	33
Sikora	28, 32
SKZ	10
Smart-Extrusion	Inside Back Cover
Solvay	23
SORTCO	50
Starlinger	13, 46
Stein Maschinenbau	Inside Front Cover+3
Tecnomatic	Outside Back Cover
TROESTER	27
Tube 2022	12
UN Global Compact	13
UTH	31
VDMA	11
VisiConsult	28
VM Verlag	47
WEIMA	40
wire 2022	12
Zumbach	15

03/2022

VM VERLAG Cologne /Germany

EXTRUSION INTERNATIONAL

The Extrusion International Magazine
is published bimonthly by VM Verlag GmbH.
P.O.Box 501812, D- 50879 Cologne, Germany

EDITORS
Bettina Jopp-Witt (Editor-in-chief)
Tel. +49 221 546 1539
redaktion@vm-verlag.com

Dmitry Kosuch
Tel. +7 996 730 0113
d.kosuch@vm-verlag.com

ADVERTISING SALES
Martina Lerner
Tel.+49 6226 971515
lerner-media@t-online.de

Bella Eidlin
Tel. +49 152 29907895
b.eidlin@vm-verlag.com

Olga Kirchner
Tel. +49 152 05626122
o.kirchner@vm-verlag.com

ADMINISTRATION
Alla Kravets
Tel. +49 2233 949 8793
a.kravets@vm-verlag.com

PRINTING
maincontor GmbH
Dr.-Gammert-Str. 13a, 63906 Erlenbach, Germany
T.: +49 937294810811
www.maincontor.de, info@frankhohmann.com

SALES REPRESENTATIVES
Quaini Pubblicita (Milano IT)
Tel. +39 02 39216180
info@quaini-pubblicita.it

China & Asia
octavia@ringier.com.hk, Tel. +852-9648-2561
maggieliu@ringiertrade.com, Tel. +86-13602785446

Tokyo PR Inc. (Japan)
Tel. +81 (3) 3273-2731
extrusion@tokyopr.co.jp

www.smart-extrusion.com

3RD EAST AFRICA INTERNATIONAL PPPEXPO AFRICA TANZANIA 2022
(Plastic, Printing and Packaging Exhibition)
22. – 24. 09. 2022
Dar-es-Salaam, Tanzania
www.expogr.com/tanzania/pppexpo/

COLOMBIAPLAST
26. - 30. 09. 2022
Bogotá, Colombia
www.eng.colombiaplast.org

4TH EAST AFRICA INTERNATIONAL PPPEXPO AFRICA ETHIOPIA 2022
(Plastic, Printing and Packaging Exhibition)
18. – 20. 10. 2022
Addis Ababa, Ethiopia
www.expogr.com/ethiopia/pppexpo/

K 2022
19. - 26. 10. 2022
Düsseldorf, Germany
www.k-online.com

wire South America
TUBOTECH
25. - 27. 10. 2022
www.wire-south-america.com
www.tubotech-online.com

INDIA ESSEN WELDING & CUTTING 2021
23. - 25. 11. 2022
Bombay, India
www.india-essen-welding-cutting.com

Plast Eurasia
23. – 26. 11. 2022
Istanbul, Turkey
www.plasteurasia.com

interpack 2023
04. - 10. 05. 2023
Düsseldorf, Germany
www.interpack.de

PLAST 2023
05. - 08. 09. 2023
Milan, Italy
www.plastonline.org

SCHWEISSEN & SCHNEIDEN
11. - 15. 09. 2023
Essen, Germany
www.schweissen-schneiden.com

70 Years of K in Düsseldorf

■ The same year that saw Queen Elizabeth II ascend to the throne, the first artificial heart valve implanted in the USA and the musical "Singin' in the Rain" inspire millions at the cinema, history was also made in Germany with the inaugural edition of K, hosted in Düsseldorf from 11 to 19 October 1952. At that time nobody suspected this event only just taking off would develop into the world's leading trade fair for the plastics and rubber industry.

Today, K in Düsseldorf can look back on a success story of 70 years. It is the most relevant information and business platform of the plastics and rubber industry worldwide. Its position as the leading trade show for the entire industry, where theme leadership and innovation go hand in hand to pave the way for visions for the future, is undisputed. On no other platform is the internationality as high as in Düsseldorf. For K 2022 from 19 to 26 October around 3,000 exhibitors from 61 nations are expected and the Düsseldorf Exhibition Centre is completely booked.

How it all started: However, K in Düsseldorf also started small once: the debut event "Wunder der Kunststoffe" (Miracles of Plastics) in 1952 registered 270 exhibiting companies – exclusively from Germany. They occupied approximately 14,000 m2 of net exhibition space.

At the premiere 165,000 visitors marvelled especially at the colourful consumer goods exhibited by plastics processors. Because from 1952 to 1959 K Düsseldorf was purely a showcase of the German industry. Any interested visitor, be it a layman or specialist, was admitted to visit the trade fair. Major attractions on show were products designed to make life more beautiful and convenient. Today, we smile at the advertising of that time, which was also aimed at the "modern housewife" and introduced her to such post-war achievements as trendy PVC raincoats or sheer nylon stockings - aesthetic epitomes of the economic miracle.

The more the plastics industry specialized and high-tech plastics for special solutions in electronics, medicine, automotive or aerospace attracted attention beyond standard polymers, the more specialists visited the trade fair. In 1963 the break was made: K in Düsseldorf became a special-interest only trade fair of international standing. Since then it has maintained its position as a leading global trade fair for the entire industry. 2019 saw over 220,000 trade visitors from almost 170 nations travel to K on the Rhine River. The international origin and composition of exhibitors will also guarantee the completeness of the product ranges and a comprehensive overview of the world market at the upcoming K in autumn.

Before K 2022 even opens its doors, there is already an opportunity to get in the mood for the trade show's anniversary. An own microsite, invites to delve into seven decades of K history:

➠**Messe Düsseldorf GmbH**
https://70years.k-online.de/en

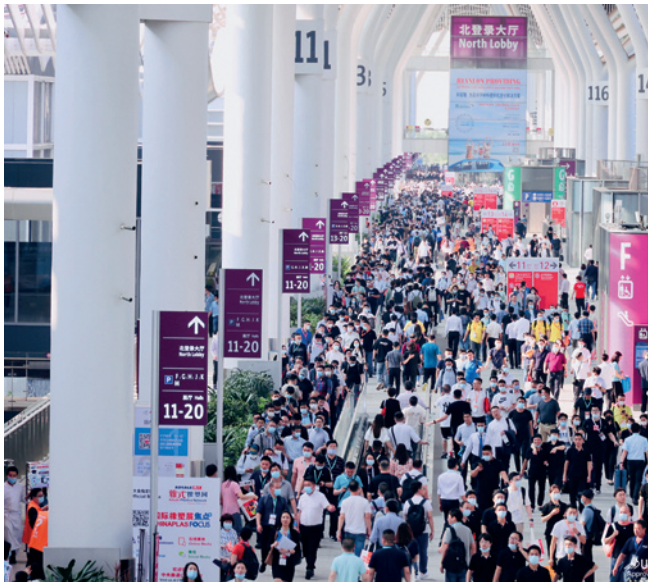

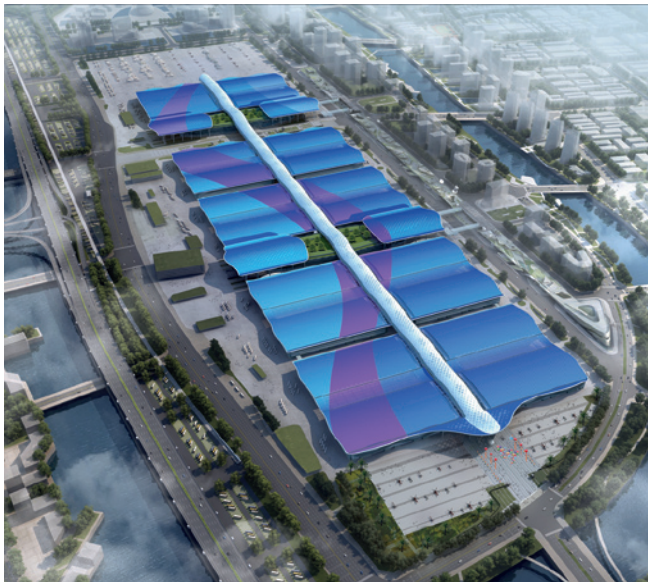

CHINAPLAS –
Postponed to 2023 in Shenzhen

■ The 35th CHINAPLAS has been postponed in view of the latest COVID development and further tightening of pandemic control measures in Shanghai and other provinces of China. After careful consideration and consultation, the 35th CHINAPLAS originally scheduled from 25-28 April 2022 at National Exhibition and Convention Center in Shanghai, will be postponed to 17-20 April 2023, and the show venue will be changed to Shenzhen World Exhibition and Convention Center in Shenzhen. In the meantime, the organizer is pleased to announce that the CHINAPLAS Virtual Show 2022: Innovative Plastics & Rubber Technology Connects the World, an online gathering for plastics and rubber industries, shall be held on 25 May – 14 Jun, 2022 to facilitate business exchanges and cooperation between suppliers and global buyers during the prime trade season in the 2nd quarter of the year.

"Since its debut in 1983, CHINAPLAS has always been committed to promoting the development of the global plastics and rubber industries. In nearly 4 decades, the exhibition not only experienced challenges but also achieved success. Thank all exhibitors, visitors and partners for standing by us all the way over the years," said Ms. Ada Leung, General Manager of Adsale Exhibition Services Ltd., organizer of CHINAPLAS.

"Despite the postponement of the exhibition, our passion to serve the global plastics and rubber industries remains unchanged. There are always more solutions than problems. We shall deliberately better utilize our advantageous resources, and actively explore more effective channels, not only for the physical exhibition in 2023, but also the CHINAPLAS Virtual Show 2022: Innovative Plastics & Rubber Technology Connects the World, to be presented soon, and CPS+ eMarketplace, converging plastics and rubber industries to provide continuous support to the quality development of the industry chain."

Riding on the resources of CHINAPLAS, the CHINAPLAS Virtual Show 2022: Innovative Plastics & Rubber Technology Connects the World shall bring you the highlights the innovative plastics and rubber technology of the year, a series of thematic and technical webinars, enhanced CPS+ eMarketplace services, etc., aiming to present the latest market trends, cutting-edge technologies and market information for the industry. The topics of webinars cover automotive, packaging, electronic appliances, medical and healthcare, etc., focusing on hot topics and changes in market demand. The Virtual Show allows exhibitors and visitors to explore unlimited local and overseas resources without time and geographical limitations.

"In 2022, let's gather in this way in this special time by making good use of digital marketing to quickly match precise needs, and promote continuous innovation in the industry as well as its upstream and downstream sectors. The change of format would not lessen our effort to the betterment of industry. See you in Shenzhen in 2023 Spring!" Ms. Leung added.

➠ **www.ChinaplasOnline.com**

28th Fakuma – Booking Levels Already High

■ The next Fakuma international trade fair for plastics processing will take place in Friedrichshafen on Lake Constance from the 17th through the 21st of October, 2023. Key issues include injection moulding, extrusion technology, thermoforming and 3D printing, as well as sustainability, circular economy and recycling. The international, world-class live event for the plastics industry will continue its tradition and follow up on the inspiring success achieved in fall 2021.

The exhibition halls in Friedrichshafen are filling up. "Already now, industry players are booking floor space at Fakuma, which underscores the great importance of the event throughout the world," explains Fakuma project manager Annemarie Schur from Schall trade fair promoters. "Fakuma is traditionally one of the top events in the plastics industry, as demonstrated once again by the live trade fair held in the fall of 2021. Fakuma was greatly celebrated and we'll pick up where we left off again in 2023."

1470 exhibitors from 39 countries came to Lake Constance in October 2021 and showcased their innovations on 85,000 square metres of overall exhibition floor space. Special attention was focused on the issues of environmental protection, circular economy and sustainability. "Recycling and environmental compatibility will be dealt with again extensively in 2023. There can be no doubt that the exhibitors will present ground-breaking innovations and continue to work intensively on pioneering solutions," affirms the project manager with certainty. Professor Dr.-Ing. Martin Bastian, director of the SKZ Institute in Würzburg, appealed for more responsibility in determining what happens to plastics at Fakuma 2021. In his passionate plea for the importance of plastics, he made it clear that they should not only be accepted, but used with enthusiasm. "And we have to do a lot more to educate people about its benefits," said Bastian last fall. All companies and households are working hard on implementing the energy transition, which won't be possible without plastics.

➠ **www.fakuma-messe.de/en/**

digital meets circular

Trends in Fire Safety Conference

27 and 28 September 2022, Würzburg/Rottendorf, Germany

■ The 18th edition of the English-language, international SKZ conference, chaired by Dr Jürgen Troitzsch, presents the latest developments in fire protection, flame retardants and systems for polymers with presentations by experts from universities, institutes and industry.

Special emphasis will be placed on fire safety aspects of electric/electronic equipment and e-mobility with contributions to photovoltaics, e-vehicles, electrical devices, battery fires, and new flame retardant systems in a variety of polymers. European and U.S. Innovations from academia and industry with topics focusing on 3D printing, FR textiles, flame retardants including sustainability and recycling will be presented and discussed. Practice is not neglected either: latest commercial flame retardant systems for textiles, thermosets, engineering and high temperature resistant plastics will cover this aspect most important for fire safety.

Participants will have the opportunity to discuss and network with international experts and speakers from Germany and abroad. The event will take place in compliance with the current COVID-19 rules. Detailed information and registration at:

Flame protection can save lives, especially in vehicle construction (Image source: benjaminnolte/stock.adobe.com)

➠ **FSKZ e. V.**
Bettina Dempewolf, b.dempewolf@skz.de
www.skz.de/bildung/tagung/trends-in-fire-safety-and-innovative-flame-retardants-for-plastics

"We are plastics"

■ The three large German plastics associations GKV Gesamtverband Kunststoffverarbeitende Industrie, Plastics Europe Deutschland and VDMA Fachverband Kunststoff- und Gummimaschinen have forged a unique alliance in the value chain to achieve greater sustainability – ecological, social and economic.
Including the five GKV member associations, the partners are committed to the mission of a circular economy and intend to actively promote the transformation of the plastics industry, with open communication playing a key role. By providing more facts and information on the transformation of the industry – for instance the latest studies on the transition towards becoming more circular – the participants want to achieve greater appreciation for plastics as a material of the future. The new platform (available in German and English) is also intended to contribute to this.

The plastics industry is changing

Together, the companies in the plastics industry and their customers want to use fewer resources and significantly reduce their environmental footprint. Besides introducing new raw materials for use in plastics production, such as biomass or CO2, the resource plastic is to be recycled as completely as possible. This is already working quite well with PET bottles or the industry's own collection systems, such as for window profiles, but yet not everywhere.
Industry and many initiatives are researching sustainable solutions at full speed, often in close cooperation with customers, policy makers and NGOs. Some of these programmes are already underway or established: "Eco Design" for sustainable product design, research partnerships on chemical recycling, the "Zero Pellet Loss" alliance on preventing pollution, or the "ERDE" initiative for collecting and recycling agricultural films.
"We are plastics" wants to share the enormous wealth of experience of its more than 3,000 member companies in the future, network individual initiatives more closely, think and act outside the box, support members with the transformation and jointly represent positions on shaping the circular economy.

➠ **www.dein-kunststoff.de**

wire 2022 and Tube 2022 in Düsseldorf

■ After a 4-year Covid-induced break the world's No.1 trade fairs wire, International Trade Fair Wire and Cable, and Tube, International Tube and Pipe Trade Fair, will again be held jointly at Düsseldorf Fairgrounds from 20 to 24 June 2022.

Anticipation is high and the sectors are confident they will be able to experience five days packed with technology innovations in Düsseldorf.

Since the pandemic is subsiding in summer and entry and exit regulations have been relaxed internationally, it becomes possible for both exhibitors and trade visitors from around the world to travel to Düsseldorf for trade fair events.

For over 35 years the key players of the wire, cable, tube and pipe industries have come together in Düsseldorf to showcase the latest machinery, plants, products and services, meet international customers and conclude business deals.

At this stage 1,000 companies from 47 countries have already registered for wire 2022. They occupy 53,210 square metres of net exhibition space. The leading international trade fair of the cable sector presents cable manufacturing and finishing machines, process technology tools and auxiliary process technology materials as well as materials, special wires and cables. Furthermore, innovations from the areas of measuring and control technology as well as test engineering and specialist areas will be on show. For the first time now, finished products from the traditional segments of fastener and spring making technology will also be exhibited. This means such finished products as technical springs, screws, cable strands, eyelets etc. will also make their way into the ranges of wire 2022.

(Photos: Messe Düsseldorf, Constanze Tillmann)

The international trade fair wire will occupy exhibition halls 9 to 14 with the segments of wire, cable, wire products and manufacturing technology, fastener technology and spring making technology plus finished products with Hall 13 dedicated exclusively to fastener and spring making technologies and their finished products. Following on from this hall will be the large and energy-intensive mesh-welding machines plus associated technologies in Hall 15.

Once again, 2022 will also see the traditionally strong attendance of exhibitors from Italy, Turkey, Spain, Belgium, France, Austria, the Netherlands, Switzerland, Great Britain, Sweden, Poland and Germany. As regards overseas exhibitors, registrations from the USA, Canada, South Korea, Taiwan, India, Japan and China have been received.

On over 40,000 square metres of net exhibition space the international tube and pipe trade fair Tube presents the complete bandwidth from tube manufacturing and finishing to pipe and tube processing and tube trading. Exhibits range from raw materials, pipes and tubes and accessories, tube manufacturing machinery and second-hand machinery to process technology tools, auxiliaries and measuring and control technology as well as test engineering. Pipelines and the area of OCTG technology as well as profiles and machinery complement the ranges. So far 735 exhibitors from 44 countries have registered.

At Tube the strongest exhibiting countries will also be Italy, Turkey, Great Britain, the Netherlands, France, Austria, Switzerland, Poland, Spain, the Czech Republic, and Germany. As regards overseas, most exhibitors come from the USA, India, South Korea, Taiwan and China.

The No. 1 trade fair for the pipe and tube industry will occupy the new Hall 1 for the first time as well as the adjacent Halls 3 and 4 with the segments tube manufacturing, accessories and tube trading. Following on from these halls will be bending and forming in Halls 5 and 6, and pipe and tube processing in Halls 6 and 7a. Hall 7a will be occupied by big plant and machinery.

Messe Düsseldorf GmbH
www.wire.de, www.Tube.de

Joining UN Global Compact

Angelika Huemer, Managing Partner Starlinger & Co Ges.m.b.H.

■ On 13 March 2022, Starlinger became one of the signatory companies of the UN Global Compact, a global pact between the United Nations and over 15,000 official members who are committed to working together for a sustainable future. By joining the UN Global Compact, Starlinger has pledged to uphold core issues such as human rights, labour standards, environmental protection and anti-corruption, and to voluntarily take measures that go beyond the legal requirements. "As a company that is active on the world stage, we have a significant responsibility towards society and the environment," emphasises Angelika Huemer, Managing Partner at Starlinger. "With our participation in the UN Global Compact, and the Corporate Social Responsibility (CSR) policy that we established recently, we want to demonstrate to our business partners and our workforce that we are committed to fully integrating the ten principles of the UN Global Compact into our business practices."

As the world's largest initiative for corporate sustainability, the UN Global Compact is a tool that enables companies not only to recognise their social responsibility, but also to shoulder it. Clarissa Graf, Sustainability Officer at Starlinger, sees this global movement as an opportunity to shape a more sustainable future. "Companies that join the UN Global Compact are called upon to comprehensively address the issue of CSR and to ascertain the status quo, thus enabling them to set ambitious goals," says Graf. "Given the fact that annual reporting is mandatory, regular evaluation of the measures and the achievement of objectives also takes place. This is the only way to ensure that we are heading in the right direction. I am delighted that Starlinger is rising to this challenge!"

Together with her team, Graf is currently gathering all the relevant data in order to be able to set realistic goals for the upcoming strategy development. Another objective is the promotion of dialogue with stakeholders, especially along the value chain – and Huemer and Graf are quick to agree on this: "Developing and implementing effective solutions to complex issues requires lively exchange and cooperation among all stakeholders."

Starlinger & Co Ges.m.b.H.
www.starlinger.com

UN Global Compact
www.unglobalcompact.org

First General Assembly –
Start for the R-Cycle Community

■ R-Cycle starts into a new phase as an open community. The first official general assembly was held on May 3, 2022 at R-Cycle member Multivac's corporate site in Wolfertschwenden, Germany.

R-Cycle was founded in 2020 as an initiative of various technology companies and organizations along the entire life cycle of plastic packaging with the aim of establishing a digital traceability standard in the market for plastic packaging via digital product passports. This prepares the technical basis for more precise waste sorting and higher-quality recycling to drive an effective circular economy.

Dr. Benedikt Brenken, Director of the R-Cycle Community, explains, "Now that the development and testing of the technical infrastructure has been successfully completed in spring 2022, the rollout is taking place. From now on, R-Cycle is accessible as an open community for all companies, institutions and stakeholders that have a legitimate interest in the field of circular economy for plastic packaging and want to use, support or further develop R-Cycle themselves."

Right at the start of the community, the circle has grown by 6 more companies to now a total of 19 members. The community offers access to a broad network of application-experienced partners and know-how in digitalization and sustainability. In addition to the general assembly at management level, the exchange takes place via specialized working groups that deal specifically with the various application areas of digital product passports. The R-Cycle platform can be networked with all common software systems as well as a wide variety of production equipment - from film or injection molding machines to processing, printing and filling machines to waste sorting and recycling systems. The traceability technology behind R-Cycle is based on GS1 standards - the leading global network for cross-industry process development and a founding member of R-Cycle.

By providing a digital product passport, all recycling-relevant data is automatically recorded during the production of plastic packaging and made retrievable via suitable markings (e.g. digital watermarks or QR codes) on intermediate and end products. This allows waste sorting facilities to accurately identify packaging and form recycling-friendly and single-variety fractions. In addition to improving product sustainability, manufacturers and processors of plastic packaging also benefit in terms of process efficiency, quality and compliance with legal information requirements.

Interested companies can obtain all membership information at:

➠ **www.r-cycle.org/r-cycle-community**

Dr. Benedikt Brenken, Director of the R-Cycle Community: "R-Cycle is not a concept, but a proven solution that we are now bringing to market together from our strong community. The first general assembly has already shown how much innovative spirit our members bring to the table to leverage the potential of digital product passports for plastic products as part of an efficient circular economy."

Guido Spix, Managing Director MULTIVAC: "We had a lively discussion regarding R-Cycle's strategic goals within several presentations and a high-profile roundtable. Digital product passports offer enormous potential for an efficient circular economy of plastic packaging. Among other things, they enable data-based and thus more precise waste sorting in order to obtain higher-quality recyclates, as well as data-optimized production processes. We are looking forward to the next steps!"

(Picture: R-Cycle)

Interplas 2023

■ Interplas, The UK's Definitive Plastics Event, is 75 Years Old in 2023. After a hugely successful 2021 show, Interplas will return to the NEC in September 2023 for a 3 day event.
Celebrating 75 years of Interplas, the 2023 edition will see almost 400 exhibitors present solutions, products, machines and ideas from across the plastics sector, as well as materials, automation, contract manufacturing and supporting technologies including software, testing, inspection, surface treatments and much more.
From the 26-28th September 2023, high-profile exhibitors will meet with over 12,000 attendees at the NEC, Birmingham to demonstrate the machinery, materials and services available to solve the current and future challenges of the plastics industry.
Duncan Wood, CEO of Rapid News Group said: "On the back of a highly successful 2021, despite the challenges of a pandemic and a fuel strike, we are looking forward to celebrating the 75th birthday of Interplas with the whole of the UK plastics industry."
The latest figures show the UK plastics market has a turnover of £27bn, with over 6,000 companies and 182,000 people directly employed by the industry; Interplas is the showcase for these numbers, and they come alive on the show floor.
After the incredible success of Interplas 2021, Interplas 2023 has seen a record rebook rate already, with many previous exhibitors eager to return and emulate the triumphs of previous years.

Interplas Events Ltd
https://interplasuk.com/

New R&D Centre for Innovative Recycling Technologies

■ Construction machinery rolls into action again at the EREMA site in Ansfelden. The ground-breaking ceremony on April the 6th signals the start of work on a new R&D centre. Two halls with a total area of 1,550 square metres and a new office building with 50 workplaces will be built. The R&D centre will offer cross-departmental and cross-company test machines and laboratory for research and development of plastics recycling technologies to further advance the circular economy. Completion is scheduled for February 2023.

Plastics recycling is currently evolving very rapidly from a niche to a trend. This is driven by the legislative targets for plastics recycling that the European Union and many countries around the world have enacted, as well as by the European Green Deal, which aims to make Europe the first climate-neutral continent and in which the circular economy plays a very central role.

However, there is not just one recycling solution for all types of plastic waste, but rather different solutions depending on the type of plastic, the product and the application intended for the recycled plastic. "It makes a difference whether clean production waste is recycled and returned to the production process or whether printed and contaminated packaging materials collected in yellow bags are recycled and used to make food packaging again," explains Markus Huber-Lindinger, Managing Director EREMA Recycling Maschinen und Anlagen GesmbH. While some plastics processing loops, such as for PET bottles, have already been closed, many other plastic waste streams still require a great deal of R&D in cooperation with everyone involved in the value chain to produce recycled pellets that meet the very highest standards for the production of new products. More space will be available for this in the new centre.

R&D is decentralised at EREMA. In recent years, approximately 5 percent of turnover was reinvested annually in research and development. Employees from different departments handle process engineering challenges, innovations in mechanical engineering and automation technology, and special technologies with a view to further improving the quality of recycled pellets. They also focus on new recycling technologies for waste plastic materials for which there is currently no satisfactory circular economy solution. The decisive factor here is also to exploit the potential of digitalisation. By collecting and analysing machine data, not only can recycling processes and product quality be further improved, but we can also develop our digital service offering for our customers. Such offerings include customer-specific information tools that feature plant and process data, predictive maintenance and online support as well as commissioning via remote access.

From the left: Markus Huber-Lindinger Managing Director EREMA GmbH; Markus Achleitner Upper Austria´s Minister for the Economy; Manfred Hackl CEO EREMA Group GmbH; and Christian Partoll Ansfelden´s Mayor (Copyright: Land OÖ/Kauder)

For material tests, which are necessary for research and development work, an expanded machine park will be available following completion of the new R&D centre. Here, the recycling process can be evaluated end-to-end, including upstream and downstream processes such as shredding and further processing of the recycled pellets. The material tests are supported by detailed analysis in the professionally equipped laboratory, which will be relocated to the new premises and upgraded where necessary with the very latest lab equipment.

➠ **EREMA Engineering Recycling Maschinen und Anlagen GmbH**
www.erema.com

Appointment

■ Davis-Standard announced that Markus Lehmann has been appointed area sales manager, representing Davis-Standard's German subsidiary ERWE-PA GmbH. In his new role, Markus will be responsible for capital equipment and converting machinery sales in Austria, Denmark, Germany, Italy, Portugal, Switzerland and the United Kingdom, as well as the Benelux, Middle Eastern and Scandinavian regions.

Markus brings more than 28 years of experience to this position, having worked at Reinhardt Technik GmbH, Atlas Converting, Kampf, Nordson and EMG Automation GmbH, among others. He has extensive technical knowledge in supporting customers with solutions-based technology that promotes efficiency, high outputs, and sustainability goals.

➠ **Davis-Standard, LLC**
www.davis-standard.com

Markus Lehmann

Positive 2021 Balance Sheet and Encouraging Outlook for 2022, Although not without Some Uncertainty for Italian Manufacturers of Plastics and Rubber Processing Machinery

■ With outcomes in some cases exceeding the forecast year-end results, the Italian industry of plastics and rubber processing machinery, equipment, and moulds closed the year 2021 with double-digit growth in production (+14%, with value exceeding pre-pandemic level) and equally encouraging results in foreign trade.

According to data from the MECS-AMAPLAST Statistical Studies Centre (the national trade association in Confindustria) combined with ISTAT data, the strongly positive final balance was driven in particular by excellent performance in the domestic market, close to +30% over 2020.

The share of exports is in line with previous years and close to 70% of production. Foreign sales also recorded a significant rebound (+9%) while not making it past the peak of 3 billion euros, which was abundantly exceeded in the three years preceding the crisis.

The main destination region is Europe, albeit with a slight decrease with respect to 2020. On the other hand, Italian companies in the sector benefited from transatlantic sales, a significant portion in North America, where the strongly growing U.S. economy expressed healthy demand, albeit with some contradictions. In parallel, strong increases in supply to priority markets such as China and India have strengthened the importance of the Asian continent.

As for Russia – a key market that has shown notable oscillations over the years – already in 2021, as if anticipating recent, dramatic developments, Italian machinery exports witnessed a decrease of 16%, barely exceeding 80 million euros. (Exports to Ukraine, historically more limited, did not exceed 7.5 million euros, -39% with respect to 2020)

In terms of product categories, after losses registered for various types of machinery in 2020, recovery was recorded in 2021 across most categories, from core machinery to auxiliaries and moulds. For example, foreign sales grew by 29% for injection and blow-moulding machines, by 18% for plants for mono- and multifilament, and by 6% for moulds (representing nearly a fourth of the total).

AMAPLAST member companies outperformed other firms in the sector, with an average increase in revenues of sixteen points over 2020. For approximately half of the companies that closed the year boasting positive growth, these increases were equal to or greater than +20%. And given this positive performance, it is not surprising that the number of employees of member companies also increased (+8% over 2020, with one third of the sample showing even more impressive hiring figures).

It is quite difficult to venture forecasts for the coming months: there are many factors that may influence the global economic context that are difficult to quantify and may accumulate or overlap over time. Shortages in raw materials and components and the resulting increase in prices that companies have been lamenting for over a year could get even worse due to the recent closure of the port of Shanghai as part of China's drastic measures to combat Covid. This will probably affect logistics and distribution chains. Essential materials for various manufacturing processes are produced in areas affected by the Russian-Ukraine conflict, which has also caused energy prices to skyrocket to levels that are unsustainable for many production chains.

Companies thus find themselves operating in an exceedingly complicated and also paradoxical situation: in spite of the above issues, orders continue to accumulate and it may become complicated for many companies to fulfil them.

Indeed, the latest survey by AMAPLAST among its members regarding the first quarter of 2022 shows that demand for plastics and rubber processing machinery, equipment, and moulds continues to grow, particularly in foreign markets (+28% with respect to January-March 2021). Outlooks for the second quarter are also characterized by optimism, at least as strictly regards incoming orders, expected to grow by another 6-7%.

This trend will naturally be conditioned to some extent with the issues mentioned above. Not surprisingly, AMAPLAST has urged policymakers to draw up another Industrial New Deal to protect European manufacturing with immediate measures and also long-term programmes regarding raw materials, energy, and logistics.

A Più S.r.l.
www.a-piu-srl.com
www.amaplast.org

New TV Format

BRÜCKNER DIALOGUE Sustainability TV

■ Environmental protection and sustainability are on everyone's lips. What can the solutions of the future look like? Brückner Maschinenbau wants to provide answers and food for thought. That is why the new series "Sustainability TV" was recently launched.
In this format, interesting topics from the areas of circular economy, future films and packaging solutions or co-operations along the value chain are broadcast. For this purpose, industry experts will be guest in Brückner's TV studio.
The first episode was broadcast on March 24 with Hery Henry, Group Head of Brand & Sustainability at WIPAK, as a special guest. In conversation with Helmut Huber, COO Sales & Project Management and Karl Zimmermann, Director Sales

and Marketing, both Brückner Maschinenbau, everything around the topic mono vs. multi-material was discussed.
The recording of the first episode and further information about Brückner Sustainability TV:

➠ **www.brueckner-maschinenbau.com/en/Sustainability/Sustainability-TV**

Sustainable Plastic Sourcing Platform

■ BASF Venture Capital GmbH (BVC), the corporate venture company of BASF Group, announced a strategic investment in Oceanworks, a sustainable plastic solutions provider that brings traceability and transparency through digitalization to recycled plastics. Oceanworks is based in the U.S. and offers a powerful platform for brands looking to reliably secure high-quality sources of ocean, ocean-bound, and averted PCR plastic (Post-consumer recycled products are made from recycled plastic and discarded materials.). For BVC this investment underlines BASF's commitment to developing sustainable solutions to raise the transformation towards a circular economy to a new level.
Plastics are an integral part of everyday life. But too much plastic too often ends up in the sea after its intended use. The responsible handling of plastic waste is therefore critical. One aspect of this is recycling: more and more companies aim for higher recycled content rates in their products and need new trusted sources of recycled plastics.
Oceanworks, with its global marketplace for recycled plastic materials and products offers a sophisticated solution. The young company makes it easy for buyers to source recycled plastics likely to add to the 11 million tons of plastic flowing into the ocean each year. Digitized blockchain-based traceability, material quality assurance, global logistics and marketing support are part of Oceanworks' offer for its customers and their partners.
BASF Venture Capital's investment comes as a part of Oceanworks Series Seed financing, enabling the company to accelerate the development of its sourcing engine and track-and-trace verification for recycled ocean plastic. The parties have agreed not to disclose the financial details of the investment.

➠ **BASF Venture Capital GmbH**
www.basf-vc.com
Oceanworks Inc.
oceanworks.com

Market Study: Pigments

■ Warning or camouflage? Pigments can send signals, but also protect against sunlight or other dangers. The small, color-giving particles are hardly soluble in water or other application media: pigments are mainly added to paints and coatings, plastics and construction materials. In contrast, dyes, being soluble, are used mainly to color liquids. Ceresana has analyzed the world market for pigments for the seventh time. Worldwide demand for pigments is predicted to rise to about 13.4 million tonnes per year in 2030. The researchers expect the highest growth in the regions Asia Pacific and Africa.
Industrial analysis of Pigment Manufacturers: Chapter 1 offers a presentation and analysis of the global pigment market, including forecasts until 2030: For each world region, the development of revenues, demand and production are given.
The respective regional demands are listed separately for the different pigment types.
The market data concerning the demand volume of each country are split up according to the different pigment types as well as the application areas.
Chapter 3 offers useful company profiles of the most important pigment

manufacturers, structured according to contact data, revenues, profits, product palette, production sites, and a brief company profile.

➠ **Ceresana**
www.ceresana.com

Recycling

■ Beier is a well-known company with extensive experience in providing machinery and engineering for plastic recycling, including the processes of crushing-grinding, washing, separating, drying and pelletizing plastic materials with all types of contamination, whether from industrial scrap or post-consumer waste.

Examples of one of the successful cases is a professional recycler in South Africa who is dedicated to supply high quality plastic packaging solutions has installed a complete pelletizing line from an densifier and two-stage extruders & water-ring downstream equipped by double filtering for Polyethylene film with an average production capacity of 500kg/h. Satisfactory with performance and service from Beier, the customer has placed repeated order of extra three machines to Beier in year 2022.

In UK, a company dedicated to the recovery and recycling of LDPE films has recently installed similar pelletizing line system with output capacity of 600kg/hr. While running steadily and well, the customer intends to continue to expand production capacity and seek greater cooperation from Beier. And also due to the UK new tax policy upon plastic manufacturing, related recycling machines from Beier will get more and more popular in this market. Beier also hopes to bring green and circularity to every country in the world.

Beier is always committed to develop long-term relationships with its clients, not just the installation of an individual project, but also an all-round service for the clients. Thanks to the enormous support from the moment the machines arrive, during installation, start-up, initial adjustments, the constant supply of spare parts, and service in different languages. In this sense, Beier's philosophy is to position itself as a technological partner of each client and in each project.

Beier Machinery
https://www.beierpm.com/english/
www.beierrecycling.com

Calling on the Circular Economy to Drive Closed Loop Food Packaging

■ Klöckner Pentaplast (kp), a global leader in recycled content products and high-barrier protective packaging, celebrates the second year of its award winning kp Tray2Tray® initiative, which works towards creating a closed loop for food packaging. With several regions of their global business now using kp Tray2Tray® flake in their trays and rigid films, they call upon the industry to help drive the initiative further, creating separate recycling and sorting systems specifically for pots, tubs and trays to turn them back into more of the same.

kp has been manufacturing fresh food packaging made with post-consumer recycled PET (rPET) for almost two decades, making them one of the largest consumers of this valuable raw material. National regulations, such as plastic taxes coming into effect in some countries means there is an ever increasing demand for recycled PET. Alongside a post-Covid world that has seen unprecedented price increases of raw materials, energy, transportation and labour costs, it is vital for food packaging manufacturers to secure material to help keep food supply chains affordable. As all packaging producers in food and drink demand recycled material, it is now essential to separate food packaging from bottle flake to meet demand.

With sites around the globe, kp is working to implement kp Tray2Tray® in its operations at every site. Its pilot site in Pravia, Spain is already using up to 30% kp Tray2Tray® flake in a range of its thermoformed products for protein – with qualified certification from RecyClass. Another five sites in the UK, Portugal, Spain and Germany are producing rigid films for form, fill and seal applications using kp Tray2Tray® as part of their extrusion processes, with sister site INFIA also incorporating it into their processes and producing fruit punnets.

Adam Barnett, President Food Packaging says: "For several years, we've been driving multiple work streams globally, collaborating with the entire value chain, including recyclers, expert partners, governments and other stakeholders, to establish new ways to collect and process separate streams of rPET tray flake. Our ultimate aim is to help build the new infrastructures and incentives to collect, sort and recycle, ensuring wherever we operate we will enable full tray to tray circularity. Now we call upon our customers, the retailers and extend this to the industry, pledging to help us create further demand for tray to tray material inclusion in their products."

In 2021, kp launched "Investing in Better", a broad and ambitious sustainability strategy with ten time-bound and measurable long-term targets. The strategy is built around three main objectives: Close the Loop, Work Smarter and Act Responsibly. Under the Close the Loop objective one of the targets is that by the end of 2025, at least 30% of the post-consumer recycled material in their packaging will be from kp Tray2Tray® material. kp can report that in their second year since the launch of the initiative, 10% of its post-consumer recycled content comes from trays.

kp Tray2Tray® gained two new prestigious awards in 2021 – Sustainable Supplier of the Year at the Footprint Awards, and Best Food Packaging in the Liderpack Awards, creating awareness of the initiative.

Klöckner Pentaplast
www.kpfilms.com/en/

World's First Dedicated Production Line for Sustainable and Floatable Shrink Sleeve Film Opened in Poland

■ Innovia Films (Innovia), a major producer of highly differentiated speciality films announces the opening of a new 6.2 metre multi-layer co-extrusion line at its site in Płock, Poland. The state-of-the-art line will be dedicated to manufacture low-density polyolefin shrink film for shrink sleeve labels and tamper evident applications.

The film forms the basis to produce sustainable floatable shrink sleeves. This facilitates easy separation of labels from PET, HDPE and PP bottles and containers in the recycling process to enable bottle-to-bottle circularity. This shrink sleeve material is mainly for use within the Food, Beverage and Home & Personal Care industries.

"The opening of the line concludes our strategic investment into a high-performance shrink film, that enables more circularity when it comes to packaging - an important goal for consumer goods companies," says Simon Huber, Managing Director, Innovia UK and Poland. "The new capacities will allow us to supply label and sleeve converters with high-quality floatable shrink sleeve material that has the potential to revolutionise the market and the way packaging is decorated to move towards more sustainable choices" continued Huber.

RayoFloat™ APO is a clear, uncoated shrink film that floats, as its density is <0.93 g/cm³. The film is also glossy, scuff resistant and printable, with a controlled TD shrinkage up to 70%. RayoFloat™ has been endorsed by the European PET Bottle Platform EPBP, although this film is perfect for use on a variety of HDPE and PP containers too.

CCL Label has been partnering with multinational brands to develop recyclable PET containers for bottle-to-bottle recycling in a closed loop. Polyolefin sleeves are also a recycling-friendly match for PP- and PE-based packaging as they stem from the same plastics family.

"In recent years we have seen big changes in the market. Brands are increasingly following Design for Recycling guidelines and are re-creating their packaging to meet recycling targets. Labels can make a huge difference here, the functional properties of label materials can support recyclability and re-usability," says Günther Birkner, member of the Management Team at CCL. "The goal of our investment in Poland is to significantly increase the capacity in polyolefin shrink films which were hardly available so far. Through our global network of CCL Label sites, we are able to convert the recycling-friendly material into EcoFloat sleeves and supply those with short turnaround times to packaging lines. This initiative will enable our customers to boost the recyclability of their packaging!"

Günther Birkner formally cuts the ceremonial ribbon to mark the opening of Innovia's new multi-layer co-extrusion line

As EcoFloat™ sleeves are made from low density polyolefins, they make the difference in the crucial sink/float recycling step at PET recyclers. The sleeve material floats and this allows for a clean separation from the heavier PET flakes that sink to the bottom of the washing tanks. This easy separation forms the basis of the yield of high-quality PET flakes that can be used in bottle-to-bottle recycling, closing the loop. EcoFloat™ has been endorsed by the European PET Bottle Platform EPBP.

"Our investment is part of our commitment to boost plastic recycling and take steps towards a circular economy as stated when we signed the Global Commitment of the New Plastics Economy led by the Ellen MacArthur foundation. In future, governments will set targets for recycling rates in municipal waste. Reaching these will not be feasible without investing in new technologies for packaging materials that support 'Design for Recycling'. As a floatable, low density polyolefin sleeve, EcoFloat™ fulfills the requirements as defined in packaging design guidelines," concluded Birkner.

Innovia Films Ltd
www.innoviafilms.com

Foundation Sets Up Its First Recycling Plant in Maharashtra, India

■ The Huhtamaki Foundation inaugurated its first recycling plant in Khopoli, Maharashtra to help drive circularity for packaging. The site – which is spread across 2,000 square meters – will recycle about 1,600 kilograms of post-consumer used flexible plastic waste per day from early May as the plant becomes fully operational. The Central Pollution Board of India (2012) estimates that India generates close to 26,000 tonnes of plastic waste a day and a little over 10,000 tonnes a day of plastic waste remains uncollected.

The recycling plant was set up with an investment of INR 90 million as part of the Huhtamaki Foundation's #CloseTheLoop initiative to tackle post-consumer waste to deliver a valuable secondary resource material. It will process post-consumer waste to create resin to produce refined com-

pounds to be used for household products for consumers in India.
The Recycling plant – which is the first of a kind – uses advanced technology to enable the efficient sorting of post-consumer waste, hot washing to remove any contamination, extrusion with extra filtration and deodorisation. This ensures the recycled material can then be used for domestic appliances. The Huhtamaki Foundation worked with the local community and authority in Maharashtra, NGOs, social enterprises, and educational institutes – including Swachh, Stri Mukti Sanghtana, CIPET and ICT – to develop this sustainable plastic waste management system. The plant is fully operational since May 2, 2022.
"The Huhtamaki Foundation has been set up to work towards the conservation of the environment in India with a focus on driving sustainable packaging solutions and driving forward the circular economy by setting up recycling schemes. It actively advocates for alternate sustainable plastic packaging structures, solutions and ease of recyclability", said Sunil Bhagwat, Trustee of Huhtamaki Foundation.
"Setting up the recycling plant is the first step that the Huhtamaki Foundation has taken in the direction of driving circularity. Over the next few years, we will strive to set up similar facilities in major geographies in India. We are constantly evaluating newer recycling technologies that could be deployed", he further added.

Huhtamaki India
priyanka.yadav@huhtamaki.com
neha.phale@huhtamaki.com
Huhtamaki
www.huhtamaki.com

Acquisition

■ MAAG Group has acquired the French tool manufacturer AMN DPI (AMN) effective 02.05.2022. Maag is thus consistently continuing its path as an integrated supplier for systems in the plastics industry from extruder tip.
Founded in 1979 and based in Normandy, AMN, a developer and manufacturer of polymer pelletizing dies and die plates, brings a wide range of know-how to the MAAG Group for both the processing and the extrusion and recycling industries. The globally positioned company with expertise also in biodegradable, highly filled recycling materials concentrates its activities primarily on the European market.

Ueli Thürig, President, MAAG Group

Ueli Thürig, President of the MAAG Group, comments: "For us, the acquisition is a consistent further step towards even greater customer centricity. Toolmaking for granulators and systems can now be carried out completely in-house. This increases the availability and delivery reliability of Maag products, and production times are reduced."
AMN's die plate production also increases Maag's service thanks to increased support options for continuous operation at the customer's site.

MAAG Group
www.maag.com

Continued Growth with a New CFO

■ KIEFEL has a new member on the management board. Anne Dierkopf took over the role of CFO at Kiefel on May 1st. She replaces Richard Schmidhofer, who filled the position on an interim basis for around a year.
Anne Dierkopf thus completes the management board with CEO Thomas Halletz and CTO Stefan Moll. She is responsible for the areas of finance, purchasing and IT. Her tasks will focus, among other things, on securing the supply chain and finalizing the deployment of SAP S/4HANA. In addition, she will continue to drive forward the organizational and systemic development of the company during high growth.
"We see Anne Dierkopf as an ideal addition to the management team at Kiefel at this time," emphasizes Thomas Halletz. "Together we will accelerate our growth course and further advance our international business development with regard to sustainable turnkey solutions for the plastics and natural fibers packaging sectors, as well as for the healthcare and appliances sectors."
"I'm looking forward to the exciting tasks that lie ahead of me in the innovative technology environment at Kiefel. Together we will realize the vision of the Kiefel Group and further develop the potential of the Kiefel companies," adds Dierkopf.

Anne Dierkopf is the new CFO at Kiefel (© KIEFEL GmbH)

KIEFEL GmbH
www.kiefel.com

Mourning for Company Co-Founder Georg Wendelin

■ The EREMA Group mourns the passing of Georg Wendelin, company co-founder, former Managing Partner and long-time Chairman of the Supervisory Board of EREMA Group GmbH, who died on the 29th of March at the age of 84.

In 1983, at a time when plastics recycling was hardly an issue, Georg Wendelin, together with Helmut Bacher and Helmuth Schulz, laid the corner stone for the group of companies that today is the world market leader by founding the company and building the first EREMA plastics recycling machine. With his pioneering spirit, his business acumen and his respectful and appreciative management style, Georg Wendelin actively shaped the success of the company, attentively and proudly keeping track of how plastics recycling went from being a niche to a trend and how the EREMA Group became the driving force behind the circular economy. In 2019, he was awarded the Golden Decoration of the Republic of Austria in recognition of his work.

"We will greatly miss Georg Wendelin as a personality who was closely associated with us for all these years. Because of his humanity, he was a highly respected figure of leadership on all sides," said Manfred Hackl, CEO of EREMA Group GmbH and himself a long-time companion of Wendelin's.

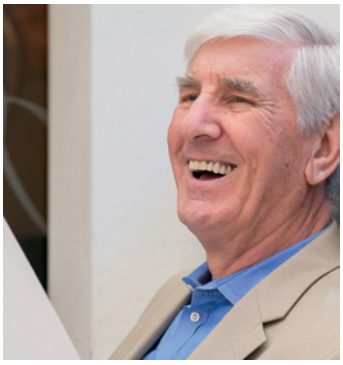

(Photo: private)

Georg's sudden death fills everyone throughout the EREMA Group with great sadness, but also with gratitude for his work, his trust and his unwavering involvement in the EREMA Group.

EREMA Group
www.erema.com

Expanded Portfolio of DURACON® POM Products Highlighted

■ The Polyplastics Group showcased its expanded portfolio of high-performance acetal materials for the medical and healthcare market at the Medical Design and Manufacturing (MD&M) West show at April 12-14 in Anaheim, Calif. The company highlighted its latest offering – the DURACON® POM (polyoxymethylene or polyacetal) PM series – for drug contact and delivery applications.

The DURACON® PM series complements the company's TOPAS® COC (cyclic olefin copolymer) product, a high-purity material for a range of medical applications. "We have expanded beyond our flagship material, TOPAS® COC, and now deliver a strong suite of products to meet the needs of end users and manufacturers in the healthcare field," said Timothy Kneale, Executive Director for TOPAS COC at Polyplastics USA, Inc. "The new offerings are part of Polyplastics' targeted effort to service the global healthcare market."

The newest offering in the DURACON® PM line is a high-flow grade, DURACON® PM27S01N, which offers reduced wall thickness, miniaturization, and lower weight for various medical devices that are becoming increasingly complicated and highly functional. The PM series also includes DURACON® PM09S01N, a standard viscosity grade.

The high-flow grade, DURACON® PM27S01N, delivers global medical and food contact regulatory compliance.

The DURACON® PM series exhibits a minimal level of extraction with food simulant (alcohol, acid, etc.) compared to competitive POM grades. The series meets regulatory compliance requirements including ISO10993 and USP Class VI biocompatibility/cytotoxicity, FDA Drug Master File (DMF) and Device Master File (MAF), and EU 10/2011 and FDA food-contact 21 CFR 177.2470.

DURACON® POM's excellent slip and wear properties permit lower friction and thus greater design freedom. The materials also show superior heat and moisture durability compared to competitive medical grades. The DURACON® PM series is usable under hot steam and Ethylene Oxide (EtO) sterilization conditions. The materials adhere to strict quality management systems including conformity to the VDI 2017 medical-grade plastics guideline. They also provide full traceability of processes and products, and production management based on GMP principles. Polyplastics also provides uniform quality and global supply.

Polyplastics offers medical device manufacturers extensive data on the long-term reliability of its materials. Customized data on extraction, moldability, durability, slip and wear, and other key attributes is also available.

TOPAS® COC is a glass-clear and highly pure plastic which offers stiffness and strength, biocompatibility, and drug compatibility for wearables, drug delivery, medical devices, diagnostics and microfluidics, pharmaceutical blisters and trays.

Polyplastics Co., Ltd.
www.polyplastics-global.com/en/

Four Recycling Systems to Thailand

■ BB Engineering GmbH (Germany), a subsidiary of Oerlikon Textile, announced that Thai Polyester Co., Ltd (Thailand) has placed a major order for four VacuFil systems for recycling bottle flakes with connected direct spinning. The polyester manufacturer, established in 2001 and with an overall annual capacity of 316,800 tons, is one of Thailand's leading producers and exclusively uses German technology. To this end, the company already operates Oerlikon Barmag and Oerlikon Neumag systems. The BB Engineering VacuFil systems will be deployed to convert existing spinning plant equipment from processing polyester to processing PET bottle flakes without loss of performance.
BB Engineering supplies the complete recycling process – from the drying stage and extrusion, all the way through to the spinning plant-appropriate fine filtration stage. Thanks to decades of experience in spinning plant technology, the German machine constructor also provides comprehensive spinning plant know-how and is aware of how the recycling process must be designed to ensure that the product manufactured using the spinning plant ultimately has the right quality. The four new VacuFil systems will be integrated into the existing building infrastructure and process landscape at Thai Polyester, with a total output of approx. 4,000 kg/h. The VacuFil systems will be complemented by BB Engineering 3DD mixers for directly feeding dyes into the recycled melt flow. Commissioning has been scheduled for 2023.
Thai Polyester will be using the new VacuFil systems to manufacture its 'EcoTPC' recycling-brand yarns. 100% of these polyester yarns are produced from bottle, fiber and yarn waste and are all GRS certified.

BB Engineering GmbH
www.bbeng.de

Enzymatic Depolymerization in PET/PVDC Barrier Film

■ Solvay and Carbios successfully demonstrated that multi-layer PET[1] films coated with Diofan® PVDC[2] high-barrier polymer are fully compatible for enzymatic depolymerization - Carbios' innovative recycling process. Results show that the PET is fully depolymerized, whereas the PVDC remains intact.
Carbios is the first company to have developed enzymatic processes dedicated to the end-of-life of plastics and fibers. The collaboration builds upon the results of an earlier proof of concept by Solvay which has confirmed that waste from packaging or other applications using bi-oriented PVDC multi-layer film can efficiently be recycled without compromising the outstanding barrier performance of the polymer. It aligns with Solvay One Planet's sustainability ambition to preserve resources and contribute to safer, cleaner and more sustainable products.
"OEMs and brand owners are under tremendous pressure to increase the sustainability of their products," says Guruprasad Sivakumar, Head of Marketing for Consumer, Healthcare and Environment at Solvay. "While PVDC has long been used for coating flexible PET films e.g. in food packaging, where it delivers impressive barrier properties, these multi-layer structures have been challenged regarding their recyclability. This is where Carbios' unique recycling technology comes as a real game changer. By providing a feasible and sustainable end-of-life management solution, it can help the industry close the loop on PVDC-coated PET films and extend the value proposition of our high-barrier specialty polymers to further markets, such as the packaging of pharmaceutical products."
The patented recycling process developed by Carbios works with specific enzymes to break down the PET molecules back into their constituent monomers. The technology uses moderate temperatures, which is ideal in the presence of PVDC, and can be applied to recycle post-industrial as well as post-consumer waste. The resulting monomers could be purified for reuse in the production of a new PET polymer of the same quality as those derived from virgin petrochemical feedstock. Notably, the joint study by Solvay and Carbios has demonstrated that PVDC does not jeopardize the depolymerization of PET.
"Our enzymatic approach overcomes the limitations of other recycling processes," explains Alain Marty, Chief Scientific Officer at Carbios. "Conventional thermo-mechanical routes require clean-mono-material grade waste, and high-heat chemical or pyrolytic recycling cannot be used to regain the material value still present in many end-of-life applications. As the industry's first solution for the recycling of complex multi-layer structures such as

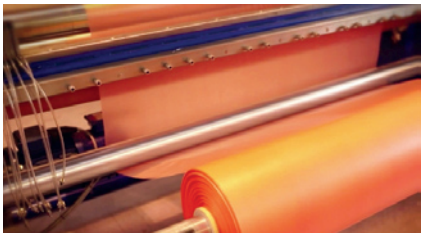

Solvay and Carbios demonstrate enzymatic depolymerization in PET/PVDC barrier film (Photo: Solvay)

PVDC coated PET films, our enzymatic biological recycling makes a significant contribution to help the plastics economy become more circular. The joint study with Solvay also shows what can be achieved by collaborating towards a common goal – to the benefit of all players along the value chain."
Solvay's Diofan® and Ixan® high-barrier polymers have a track record of proven food packaging applications from fresh and processed meat to fish, poultry and cheese. They provide a superior barrier against the permeation of both water vapor and oxygen – most existing alternatives only meet one or the other purpose – as well as to odors and loss of aroma or flavor.

[1] Polyethylenterephthalat
[2] Polyvinylidenchlorid

Solvay
www.solvay.com
Carbios
www.carbios.com

Recyclable Packaging for Liquid Soap

■ Mondi has joined forces with French machine supplier Thimonnier to develop a recyclable packaging that reduces plastic waste. The companies have created a new packaging for liquid refills that is designed so that it can be entirely emptied. The berlingot sachet is made from a recyclable mono-material, coextruded polyethylene (PE). It not only weighs less but also reduces plastic usage by more than 75% compared to rigid plastic bottles. The refill solution can replace the current industry standard of multilayer PVC refill containers, which are effectively not recyclable.

The unusual shape of the sachet is eye catching and differentiated. The durable and leak-proof solution allows consumers to smell the product inside, a particularly useful feature for the liquid soaps it is designed to protect. The lightweight material also makes it more convenient for customers, especially those who are buying in-store.

"Our goal working with Mondi was to find a packaging alternative with low environmental impact and good runnability. We are pleased to have found a solution that achieves both", explained Eric Duhoo, General Manager at Thimonnier.

For Mondi, the solution was further demonstration of the benefits of partnership and its importance to achieving a truly circular economy. "Our Mondi Action Plan 2030 (MAP2030) sustainability framework sets ambitious goals to tackle global issues across the value chain: creating circular-driven packaging and paper solutions that are made by empowered people taking action on climate. We are proud and excited to partner with customers like Thimonnier to achieve our goal of keeping materials in circulation and making a real difference", said Olivier Werbrouck, Regional Sales Consumer Flexibles, Mondi.

Mondi and Thimonnier team up to make recyclable packaging for liquid soap refills (Photo: Mondi)

MAP2030 includes a target to make 100% of Mondi's products reusable, recyclable or compostable by 2025. The sustainability plan also includes other commitments and targets in relation to circular driven solutions, people and climate – all of which are underpinned by a set of responsible business practices. Mondi has a long history of working with industry leaders to design packaging that is both effective and sustainable by design.

Mondi
www.mondigroup.com

Plastimagen México –
Restraint in the Field of Recycling

■ On an area of around 34,000 square meters, 480 companies from 23 nations presented themselves at the Plastimagen in Mexico City. The industrial show is considered the flagship fair of the plastics industry in Latin America. Among a total of 13 pavilions, eleven of them country-specific, Europe in particular was strongly represented. Ten rounds of presentations and two days of workshops rounded off the trade fair program. From shredders to robots, the approximately 22,000 visitors from 35 countries were introduced to many aspects of plastics processing and recycling.

From 23 nations presented 480 companies themselves at the Plastimagen in Mexico City

Herbold Meckesheim presented itself in the German pavilion and was actively supported by its Mexican representation. After the pandemic-related restrictions of the past two years, industry and sector representatives, cooperation partners and customers flocked to the booth, all the more delighted to learn about the latest technological developments of the Meckesheim-based machinery manufacturer with a view to recycling plants and machine solutions. Especially washing plants, granulators and pulverizers were in the focus of interest.

Although the trade fair reports a "historic level of pre-sales", a certain restraint can also be felt in the Latin American region. While investment decisions in Europe are influenced by the military conflict on the continent, in Latin and South America the lack of raw materials and primary products, far from the price development, determines the situation.

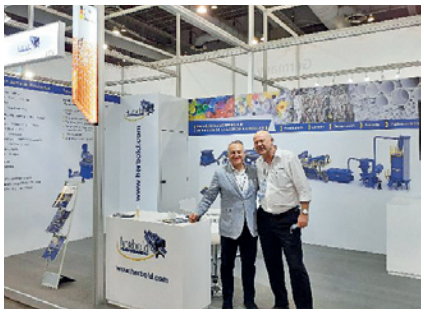

A warm welcome at the Herbold Meckesheim booth (Photos: Herbold Meckesheim)

It fits in with the efforts of the recyclers that the Plastimagen has set itself the goal of producing no plastic waste. Thus, 18 tons of plastic waste have been collected so far to be sent to a recycling plant. Plastimagen México 2023 is again scheduled at Centro Citibanamex in Mexico City for November 7-10. Herbold Meckesheim has made a firm note of the date.

Herbold Meckesheim GmbH
www.herbold.com

New 500 Series Rubber/ Silicone Extrusion Crosshead

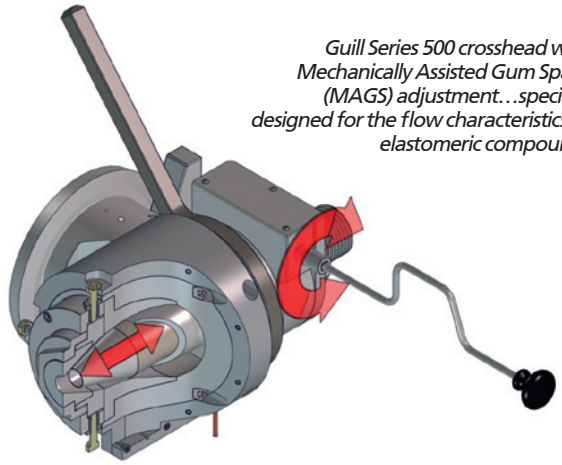

Guill Series 500 crosshead with Mechanically Assisted Gum Space (MAGS) adjustment…specially designed for the flow characteristics of elastomeric compounds

■ Guill Tool introduced the new 500 Series crosshead with MAGS gum space adjustment. The 500 Series is designed specifically for the flow characteristics and unique processing challenges of elastomeric compounds. One of the key features engineered by Guill on this new crosshead design is the mechanically assisted gum space (MAGS) adjustment system. This new method of gum space adjustment allows the operator to make an effortless adjustment from a single point using a common socket wrench. No more need to struggle with multiple nuts and bolts in order to adjust gum space, which leads to faster adjustments. The visual indicator on the core tube allows the operator to see how far the gum space has been moved, making those adjustments much more accurate and repeatable.

The hardware-free and patented cam lock design of the new 500 Series from Guill means no time is wasted unbolting and re-securing fasteners for disassembly and re-assembly. Only half of a rotation of the cam nut is required to loosen and automatically extract the deflector from the head body, which is another time saver. Also, with no undercuts on the deflector, there are no material hang-ups when extracting the deflector, allowing for faster and easier cleaning and changeover.

The new 500 Series also features the latest Center-Stage concentricity adjustment system that significantly reduces pressure on the tooling, allowing easier and more precise concentricity adjustments without loosening the face bolts. Easy-Out inserts for the adjusting bolts also allow simple replacement of locked or damaged adjusting bolts, which further saves on repair and downtime.

Another innovative feature of this new rubber/silicone crosshead is a cast aluminum liquid-fed cooling sleeve that allows the user to switch out the cooling jacket in the event of a line obstruction, again reducing downtime compared to traditional integrated cooling systems.

The new 500 Series crosshead with MAGS gum space adjustment is a drop-in replacement on most existing NRM lines, however this crosshead design can also be adapted to fit any extruder design or line layout.

The addition of a newly designed flow inlet channel reduces the shear and heat that is generated as the materials are being processed. This leads to lower head pressures allowing the material to move through the head in a much more balanced and even flow.

All crossheads supplied by Guill are furnished with a tool kit for assembly and disassembly as well as a detailed operator's instruction manual. The engineering team at Guill will gladly assist users in the implementation and operation of the new 500 series crosshead.

Guill Tool & Engineering Co., Inc.
www.guill.com
https://youtu.be/jeNovmMtcBs

New Inner Diameter HVOF Coating for Oil & Gas Industry Launched

■ Extreme Coatings, a leading global supplier of wear-resistant coating solutions for the plastics, rubber, and oil and gas industries, has announced the launch of a new internal diameter High Velocity Oxygen Fuel (HVOF) coating system for oil and gas and industrial components.

The new IDX internal diameter HVOF coating provides a high-performance tungsten carbide nano coating for diameters as small as 3-in, lengths up to 8 ft, and thicknesses up to 0.015 of an inch. The thermal spray system – consisting of a delivery mechanism and coating material – provides a tungsten carbide, cobalt chrome coating which delivers exceptional abrasion resistance and three times the service life of chrome-plated parts.

"The IDX system meets the industry's growing demand for abrasive, corrosive, and aggressive processing in small-inside diameter applications," said Scott Caplan, Executive Vice President, Extreme Coatings. "This major technology advancement enables us to keep pace with other performance improvements in the downhole drilling industry."

The internal diameter HVOF coating is also corrosion resistant and crack free. It is 99% porosity-free and superior to white iron, chrome plated, or other ID surface engineered option coatings.

The IDX system is targeted for a range of oil and gas applications including housings, cylinders, bushings, sleeves, mechanical seals, and hydraulic cylinders.

Extreme Coatings
www.extremecoatings.net

Recyclable All-PE Film with Digital Product Passport

■ Reifenhäuser Blown Film showcased technical solutions for the economical and sustainable production of blown film that pay off in terms of a functioning circular economy and reduction of the carbon footprint at the new GREENPLAST 2022 congress trade fair in Milan from May 3 to 6. Highlights included the patented EVO Ultra Stretch production process for fully recyclable All-PE Blown Film, the use of digital product passports in the interests of a functioning circular economy, and technologies for the economical processing of post-consumer and post-industrial recyclate. The blown film plant specialist showcased examples of future-proof technologies that are consistently designed for the production of sustainable products.

EVO Ultra Stretch, Reifenhäuser's patented stretching unit, enables the production of mono-material composites (All-PE Film) for fully recyclable flexible packaging in which the otherwise usual PET layer of the packaging is replaced by stretched PE. This is made possible by the maximum 10-fold stretch rate, which gives PE films completely new mechanical properties. There is no need to adapt further processing steps such as printing, laminating and converting. Thanks to the patented position of the stretching unit directly in the haul-off of the blown film line, the film is stretched at the ideal time and from first heat, which at the same time makes the process particularly user-friendly, stable and efficient.

Reifenhäuser All-PE Pouch: A digital watermark concealed in the printed image allows waste sorting facilities to retrieve recycling-related information from the R-Cycle digital product passport (Photo: R-Cycle)

To make the best use of the potential of fully recyclable packaging for the circular economy, Reifenhäuser relies on digital product passports via R-Cycle – the traceability standard for plastic packaging. At Greenplast, Reifenhäuser showed a fully recyclable ALL-PE pouch equipped with this technology.

R-Cycle automatically stores recycling-relevant information during production and makes it available as a standardized data record for the waste sorting process. This enables data-based and thus more precise sorting for high-quality recycling. Production machines along the entire value chain can thus record relevant data, such as the type of plastic, printing ink, adhesive, additives and also the use of the packaging (food / non-food), and make this information available on the end product via appropriate marking (e.g. digital watermarks). R-Cycle was developed to market maturity by various technology companies and organizations along the entire life cycle of plastic packaging. Reifenhäuser is a founding member of the cross-industry community that aims to establish digital product passports to build a functioning circular economy worldwide.

High recyclate content in packaging is just as important as recycling-friendly design of plastic products. However, manufacturers face new technical challenges in processing recyclates: The highly fluctuating quality of the input material is one of the biggest problems. With the Reifenhäuser EVO Ultra Fusion extrusion process, blown film producers make themselves less dependent on the input quality and can also dispense with the energy- and cost-intensive regranulation of the recycling material. Fluff (film shreds) as well as all types of production waste and PCR material can thus also be extruded directly. Ultra Fusion processes even the lowest quality recyclates, which were previously out of the question for the blown film process, into functional films for applications such as trash or mailing bags. This

Reifenhäuser EVO Ultra Stretch: The position of the stretching unit directly in the haul-off of the blown film line is patented and is a unique selling point on the market (Photo: Reifenhäuser

is made possible by twin-screw technology, for a better melt homogenization, which ensures a stable process. Processors can also degas the system very easily and effectively, removing unwanted ingredients in the recyclate.

For processing better quality regranulates, Reifenhäuser recommends the already well-known EVO Extruder in the 33L/D variant. Thanks to optimized barrier as well as shear and mixing parts, this extruder processes recycled material as reliably and naturally as other raw materials.

Reifenhäuser Blown Film
https://reifenhauser.com
R-Cycle
www.r-cycle.org

With EVO Ultra Fusion, fluff (film shreds) as well as all kinds of production waste and PCR material of the lowest quality can be processed into functional films for applications such as trash or mailing bags (Photo: Reifenhäuser)

Innovations in the Rubber Industry

■ For 130 years TROESTER has stood for outstanding quality in the development and manufacture of innovative machines for the rubber industry – Made in Germany. The excellent results achieved with TROESTER extrusion technology in combination with intelligent line control and regulation systems have made the company a competent manufacturer of complete lines and individual machines. TROESTER is known as a company that responds flexibly to customers' wishes and works with them to implement high-quality, customised solutions.

More than a decade ago, TROESTER developed the automatically centring cross extrusion head, which has since written its own success story. Hose manufacturers all over the world swear by this system, which delivers outstanding results in terms of end product quality, material savings, minimised set-up times and the lowest possible product tolerances.

TROESTER has taken the next logical steps with the development of the automatically centering straight extrusion head and the double cross extrusion head. With the double cross extrusion head, two layers can be produced simultaneously, each centred by independently operating servo-hydraulic systems. Every gram saved leads to sometimes drastically reduced production costs.

TROESTER customers can choose between the automatically centering straight extrusion heads, cross extrusion heads and double cross extrusion heads to improve their production and product qualities, coupled with material savings, better product tolerances and minimised set-up times.

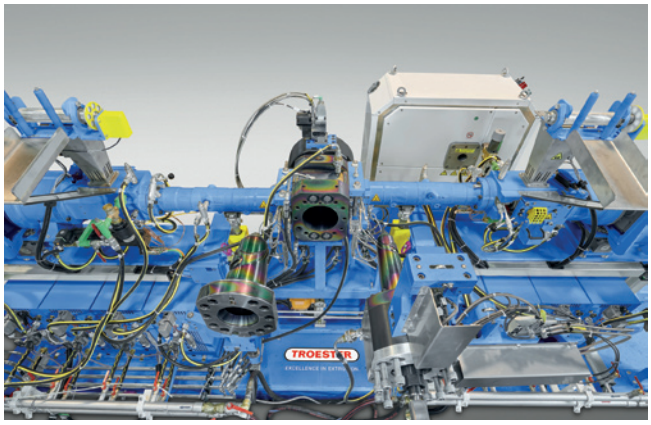

Automatically centering double cross extrusion head

The automatically centering TROESTER extrusion heads can be supplied for existing extruders as a stand-alone version or together with TROESTER extruders as a complete system.

TROESTER GmbH & Co KG
www.troester.de
DKT 2022 Nuremberg / Germany, 27.–30. Juni 2022
Stand 9-625

Reusable To-Go Mugs

■ Bottle manufacturer Yiwu Midi Technology, Zhejiang has selected Ultrason® P 3010 from BASF to produce reusable to-go mugs for the market launch of its new business segment. Because of its durability, high-temperature resistance and design versatility the BASF polyphenylsulfone (PPSU) offers a unique combination of lifestyle attributes and sustainability for high-quality to-go cups that are lightweight, shatter-proof and fashionable: Ultrason® P 3010 maintains the flavor of e.g. coffee without any impact on taste or odor. It does not show any discoloration by contact with hot or cold liquids like coffee, juices, soft drinks or tea.

At the same time, the BASF thermoplastic polymer contributes to less packaging waste as the mugs can be reused many times and thus support a circular economy: The chemically resistant Ultrason® P 3010 easily withstands cleaning agents as well as the high temperatures in dishwashers and is even sterilization-proof without losing its excellent mechanical properties or visual appearance. Thus, reusable to-go mugs made of Ultrason® can be part of a reuse and multiple-cycle system that saves valuable resources and avoids packaging waste as targeted in the Single-use Plastics EU Directive 2019/904.

Ultrason® P 3010 is a medium-viscosity injection-molding and extrusion grade with temperature-independent properties spanning a wide temperature range from –30 to +180°C. It is food contact compliant in the US, the EU and China. "Many to-go mugs on the market are either made of single-use materials, are not resistant to hot liquids or are made of easily breakable glass, or of steel which lacks design freedom", says Georg Graessel from Global Business Development Ultrason® at BASF. "Our PPSU with superior toughness and chemical resistance is a high-performance and sustainable alternative to such materials. It gives our customers more freedom in design and provides consumers with long-term usage."

Yiwu Midi Technology has selected Ultrason® P 3010 from BASF to produce reusable to-go mugs (Photo: BASF 2022)

BASF Performance Materials
www.ultrason.basf.com.

Innovative and Sustainable Measuring and Control Technologies

■ At wire 2022 in Düsseldorf, from June 20-24, 2022, SIKORA presents a broad portfolio of future-oriented measuring and control systems for an efficient and sustainable quality control for the wire and cable, optical fiber and plastics industries.

Numerous intelligent technologies, for example, for online measurement of wall thickness, eccentricity and diameter of cables, confirm SIKORA's claim to develop and provide innovative and sustainable measuring solutions for the global cable market. For almost five decades, SIKORA measuring systems have contributed to quality control and a simultaneous reduction of plastic material during cable production. This saves costs and contributes to a sustainable production. Up to 5 million tons of carbon dioxide are saved annually by using SIKORA measuring devices.

At wire, visitors can experience the performance of the measuring devices during extensive product demonstrations. One highlight is the X-ray measuring system X-RAY 6000 PRO that is used for the measurement of wall thickness, eccentricity, the diameter and ovality of cables with up to three different material layers, for example in insulating and jacketing lines. As a pioneer in X-ray measuring technology for cable extrusion, SIKORA has been setting trends for 30 years. The combination of the X-RAY 6000 PRO with the processor system ECOCONTROL 6000 allows for an automatic control of the wall thickness. By reducing the wall thickness by, for instance, 5 %, not only raw material consumption is reduced, but plastic material savings in the six-figure range are also achieved.

The new FIBER TENSION 6003 measures the tension of optical fibers in the drawing tower

The quality of a cable starts with the pureness of the raw material. Thus, SIKORA also offers online and offline inspection, sorting and analysis systems for plastic pellets. By using inspection and sorting systems, contamination can be detected and automatically sorted out, breakdowns eliminated and material costs saved. Besides economic advantages, the environment can be preserved at the same time due to less waste.

With the premiere of the FIBER TENSION 6003, SIKORA widens its product family for quality control of optical fibers. The gauge head offers an extremely fast, reliable and precise tension measurement and control. Due to the high measuring rate of up to 10 kHz and the application of the birefringence principle, the stand-alone gauge head is particularly attractive for manufacturers of high-end solutions. The FIBER TENSION 6003 is predestined for optical fibers that are further processed into premium optical fiber cables. The FIBER TENSION 6003 can be used for hot as well as cold measurement of the bare fiber.

The X-ray measuring system X-RAY 6000 PRO ensures precise measuring and control of the cable dimensions for more cost efficiency and sustainability

Maintaining the availability and efficiency of the SIKORA systems at the customer's site is SIKORA's top priority. At wire, the SIKORA service team presents the entire range of its service portfolio. From installation and commissioning of the devices to consulting and training, always fitting to the individual customer requirements.

Turning ideas into innovations and product developments that achieve the highest quality, sustainability and cost effectiveness in the wire and cable as well as plastic industry is SIKORA's claim. The company emphasizes this at wire with the "Solution Corner". Customers are invited to personally discuss with SIKORA experts their ideas, visions and technical requirements on the systems for quality control for the future of measuring technology in a creative atmosphere.

➠ **SIKORA AG**
www.sikora.net

X-ray Operating System for Non-Destructive Testing

■ After the launch of the ECO line and a new collection of high-end customized solutions, VCxray (a division of the market leader VisiConsult) introduced a comprehensive X-ray Operating System named x.OS during the Control exhibition in Stuttgart, Germany.

The origins of VisiConsult were based on the development of innovative software solutions for industrial X-ray inspection. This success led to strong growth in the field of machinery and automation, and has since resulted in decades of experience in solving various customer needs and industry challenges. VisiConsult's NDT division "VCxray" now presents an innovative software ecosystem that is both comprehensive and configurable at the same time. This modular approach can be used as separate offline applications or can be configured as an interconnected online solution – and virtually everything in between.

System operators work with the control software "VC.control" to run or automate the X-ray system. "VC.acquire" is a versatile acquisition software for 2D X-ray images or 3D CT projections that includes many measurement and image

processing features. Other colleagues in the office can evaluate and interpret the data directly via "VC.reco" for CT scans or "VC.review" for analysing and interpreting 2D images.
All of these tasks can be accomplished without the necessity of being in the same place because all of the modules are connected to each other locally or via the cloud. The inspection process can also be shared between different facilities worldwide. Using the "VC.server", the remote evaluation team can access all data within the "VC.storage". This is also the place where data is archived for long-term storage.
Quality Managers or operators can use the "VC.dashboard" on the shopfloor to get an overview about the status of the different inspection projects, the status of each part and any other KPIs. Customers with a fully automated X-ray inspection system will benefit from the "VC.planner" module where supervisors can easily develop or edit programs and techniques for their systems. They can perform this task offline, and then send the new inspection programs to the "VC.control" module without causing any machine downtime. It is important to note that these steps do not require any special programming knowledge.
All of this is now possible with the new software family from VCxray – a modular approach that can be configured for any situation. For inspectors, the x.OS offers maximum comfort and efficiency through seamless integration of all parts.

VCxray
VisiConsult X-ray Systems & Solutions GmbH
https://visiconsult.de

Spotlight on Technology for the Regeneration of Plastics

■ Bausano took centre stage during the first edition of GREENPLAST. This event – 3 to 6 May 2022 – is dedicated to innovative solutions for the plastics and rubber industry, with a special focus on environmental sustainability, energy efficiency, Reduce-Reuse-Recycle, and the circular economy. Visitors got the chance to find out more about the new series of E-GO R single-screw extruders, which are designed for regenerating both in-house industrial waste and domestic post-consumer waste from washing lines.
Thanks to the groundbreaking E-GO R technology, highly contaminated plastics, such as HDPE residues from containers for milk, motor oil, shampoos and conditioners, soap, detergents and bleach, can be fed back into production processes. Some examples include PP waste from lunch boxes, yoghurt pots, syrup and medicine bottles, caps and LDPE waste from cling film, shopping bags and squeezable bottles.
Specifically, the E-GO R extruders are perfect for recycling not only lightweight and highly moist materials, but also heavy film and materials with low water content. After crushing, the plastic flakes and ground plastics are conveyed directly into the extruder through a forced feeding system, which is specifically designed for its intended use. Throughout the process, volatile substances and moisture are removed thanks to a high-performance degassing system that prevents the occurrence of defects in the granules such as "air bubbles", which are due to gases in the starting compound or formed during the extrusion process. The extruded mass is subsequently filtered and fed to the granulation head. Moreover, the constant speed, combined with a sophisticated screw design, ensures that each product meets high quality standards. The line is complemented by a liquid ring or immersion cutting system.

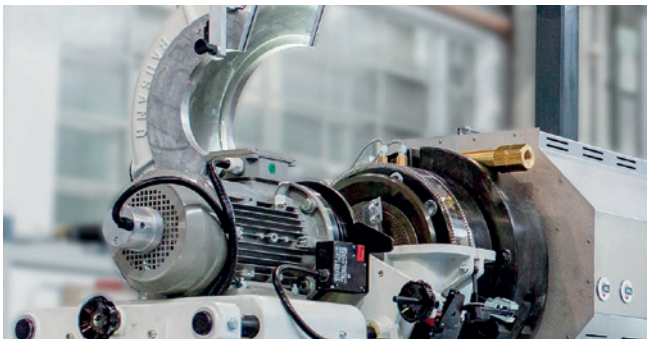

In addition, Bausano's technology for the regeneration of plastics includes solutions for producing granules from recovered rigid and flexible PVC, which are used for plumbing pipes, tiles and many other applications. In this regard, the extrusion lines of the MD NEXTMOVER series, which, on request, can be fully customised even with additional components, stand out for being flexible when it comes to recycling various types of PVC waste, according to the level of contaminants, percentage of humidity and grind size.
"Given that virgin raw materials are becoming less readily available and environmentally sustainable, the solution is to switch to a circular economy", says Clemente Bausano, Vice President of Bausano. He also adds, "In fact, by using recycled raw materials, procurement costs can be minimised, which translates into immediate savings for the entire supply chain. At Bausano, however, we believe that plastics from post-industrial or post-consumer waste materials should be fed back into the production cycle: this is necessary not only from an economic perspective, but also, and especially, for ethical reasons in order to protect natural resources and the sustainability of the entire supply chain'. He then concludes: 'This is why we strive on a daily basis to design extrusion lines that are increasingly eco-friendly and as efficient as possible."

Bausano & Figli S.p.A.
www.bausano.com

Plastics Recycling Awards Europe

Matthias Schmitz, Head of Engineering Recycling Technology

■ BB Engineering has been shortlisted for the prestigious Plastics Recycling Awards Europe 2022 for the category Recycling Machinery Innovation with its PET recycling line VacuFil® Visco+ for fiber-to-fiber inline recycling.

"We are still a recycling newcomer and are therefore particularly proud that our technology has already convinced so far that we are now among the finalists. Our origin lies in extrusion, filtration and spinning technology. We have incorporated our decades of know-how in these fields into the development of our VacuFil® Visco+ process. We have succeeded in developing a fiber-to-fiber recycling process that produces high-quality rPET yarn. Being named a finalist is already a great achievement for us." said Mr. Matthias Schmitz, Head of Engineering Recycling Technology.

BB Engineering GmbH (BBE) is a German machine building company founded in 1997 as a joint venture between Oerlikon Barmag, a subsidiary of Oerlikon Textile GmbH & Co. KG, and Brückner Group GmbH. Today, the company employs more than 160 members of staff at its location in Remscheid, Germany. BBE is the exclusive supplier of its mother companies for extrusion systems, melt filtration technology, recycling technology (VacuFil® Visco+), compact spinning technology (VarioFil®) and air-texturized yarn (ATY) technology. Beyond that, the entire portfolio is offered to third parties within the plastics and textile industry.

The process presented as part of the award is the combined VacuFil® Visco+ with VarioFil®. This machinery enables the textile industry to perform closed-loop inline recycling of post-consumer polyester (PET) textile waste. The given recycling technology is a thermo-mechanical recycling process optimized for the textile industry. Key component here is the liquid state polycondensation reactor, known as Visco+, to adjust the intrinsic viscosity. Compared to existing fiber recycling processes, which address rather less demanding textile applications and don't include subsequent spinning, BBE's solution is a whole-in-one process that enables the textile industry to perform closed-loop inline recycling of post-consumer PET fiber waste even into high-tech textile yarns with low dpf-values.

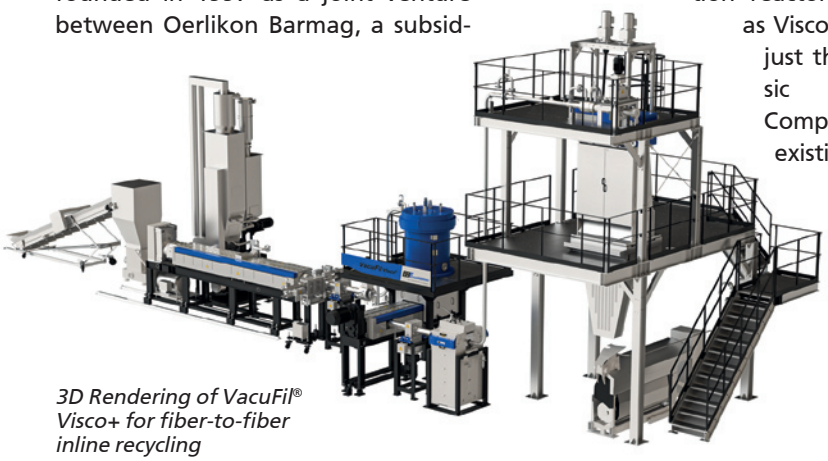

3D Rendering of VacuFil® Visco+ for fiber-to-fiber inline recycling

The Plastics Recycling Awards Europe 2022 winners will be announced on 23 June, during the second day of the Plastics Recycling Show Europe taking place at the RAI Amsterdam.

Open to organisations and individuals across Europe who are involved in the recycling of plastic materials, the Plastics Recycling Awards Europe are organised jointly by Plastics Recyclers Europe (PRE) and Crain Communications, organisers of the Plastics Recycling Show Europe.

www.prseventeurope.com

➠ **BB Engineering GmbH**
www.bbeng.de

New Engineering Plastic Fine Powders

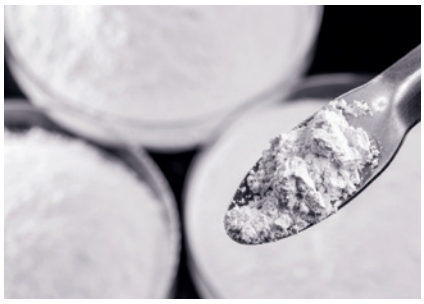

(Source: Polyplastics Co., Ltd.)

■ Polyplastics Group has introduced a new series of engineering plastic fine powders which are compatible with a broad range of manufacturing methods. The company has expanded its lineup with DURAST™ Powders which go beyond traditional injection molding and extrusion and are targeted for low-volume production of complex parts utilizing sinter forming, compression molding, and 3D printing.

DURAST™ Powders made of polyacetal (POM), polyphenylene sulfide (PPS), polybutylene terephthalate (PBT), and liquid crystalline polymer (LCP) have a unique spherical shape and are controlled for fine, narrow particle size distribution (10 µm-200 µm). Engineering plastics in powder form permit the use of manufacturing methods that were previously impossible with pellet shapes, making it possible to impart the strengths of engineering plastics and additional performance attributes. Polyplastics developed these fine powders after extensive research and testing of powder manufacturing methods.

Polyplastics was successful in powdering a POM with a low glass transition temperature. Moreover, modified DURAST™ POM exhibits slow crystallization and is useful for 3D printing. It also has low warpage in SLS models

and superior powder flowability so it can achieve model density over 95%.
DURAST™ PPS can be used to mold porous structures through sinter formation. It is a linear PPS with strong toughness and heat resistance, along with strong chemical and radiation resistance. Since it has few ionic impurities, DURAST™ PPS also withstands rigorous electrical requirements.
DURAST™ LCP offers superior vibrational absorption with high heat resistance and high elasticity in dielectric constant modifiers. It also exhibits low water absorption and electrical properties that are stable at high frequencies. DURAST™ LCP is available in both formless and spherical powders.

Polyplastics Co., Ltd.
www.polyplastics-global.com/en/approach/8.html

Innovative Solutions for the Gentle and Clean Processing Rubber- and Silicone Compounds at Expobor 2022

■ From 22nd to 24th June 2022 in the Expo Center Norte in São Paulo (Brazil), at Expobor 2022 – one of the most important meeting places in the rubber industry – UTH GmbH from Fulda/Germany will be introducing their latest technological developments and expanded product range – based on UTH's proven roll-ex® gear pump technology. These include in particular the latest fine mesh straining solutions, which are increasingly being used in the rubber and tire industry due to the growing demand for high quality and sustainability. In addition to the challenge posed by new material requirements, the focus is on consistently reducing scrap rates in order to cut costs and save valuable resources. Accordingly, UTH has focused on optimizing the manufacturing of rubber and silicone products.
With throughputs up to 10000 kg/h, UTH's roll-ex® gear extruder systems have set the benchmark worldwide for fine mesh straining of rubber compounds. Using either the compact two-roll feeder (TRF) or a conical twin screw feeder (DSE), the modular design of the roll-ex® system enables the integration of the strainer in each specific line design. Because of the flexible and compact design a seamless integration into existing lines is also possible.
At UTH's booth, visitors will learn all about the outstanding solution for the economical processing of rework material: the TRP Reworker. This modular system offers various options, especially for tire production, and thus helps to save

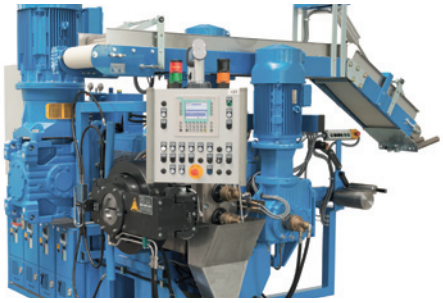

energy as well as raw material and reduces process-related waste. In addition, the product portfolio of UTH GmbH also includes innovations such as the continuous polymer dosing system and products for silicone compounding.

UTH GmbH
www.UTH-gmbh.com

Expobor: Location: S-T / 2-3 T02

Making the Plastic Circularity a Reality

■ Together, Borealis and the Reclay Group, international experts in environmental and material recovery management, announce the beginning of a new, jointly-founded entity, Recelerate GmbH. The new organisation's mission is to redesign the critical steps of the plastics sorting and recycling system for LWP to speed up circularity, born from a need to meet the rising market demand for high-quality recyclates for use in high-end plastic applications.
Recelerate will play a critical connector role in the plastic value chain, connecting downstream and upstream expertise to rethink how LWP waste is managed, sorted, processed, and recycled. The new entity will be powered by Reclay Group's strength in the area of extended producer responsibility schemes (EPR) and Borealis' focus on growth of a more circular plastic model, powered in part by its proprietary recycling technology Borcycle™.
This combination will enable a macro view approach to identify opportunities to add value and invest where it matters, to ensure more and more plastic waste from LWP is able to stay within the value chain.
For Reclay, Recelerate will help grow the reach, scale and impact of EPR; for Borealis, it will open up supply of post-consumer plastic waste to be recycled with its Borcycle recycling technology; for customers and consumers, it means greater access to high quality recycled materials. Recelerate will connect critical partners in the plastic value chain; closing the gap, and accelerating the growth and scaling of circular plastics.

From left to right: Christian Abl, Dr. Fritz Flanderka (Reclay), Lucrèce Foufopoulos (Borealis), Raffael A. Fruscio (Reclay), Chris McArdle (Borealis) (Photo: © Borealis)

Borealis AG
www.borealisgroup.com

Quick and Reliable Detection of Surface Defects on the Cooled Tube or Pipe

How to avoid complaints by using SIKORA measuring technology

Measuring tube and pipe dimensions after the vacuum tank has long been an integral part of comprehensive inline process control. However, a new comparison of product parameters at the end of the extrusion line also offers tube and pipe manufacturers attractive advantages.

The measuring values of the LASER Series 6000 gauge heads (here: 4-axis solution) are visualized on the ECOCONTROL 600

The SIKORA diameter gauge heads of the LASER Series 2000 and 6000 are versatile applicable in the line. In addition to the common wall thickness measurement after the vacuum tank, for example by SIKORA's X-RAY 6000 PRO X-ray device, another LASER gauge head can be installed at the end of the line where the tube or pipe is already crystallized. On the one hand, the diameter values of the cold measurement provide information about the shrinkage behavior of the tube respective pipe. On the other hand, an additional ovality measurement is thus realized.

Furthermore, the tube or pipe surface is inspected for defects and protruding defects are reliably detected. This final quality control leads to the avoidance of complaints by the end customer. The combination with an ECOCONTROL 600 processor system (with 8.4'' touch screen) enables the measuring values to be logged in detail at the end of the line. The installation of a LASER gauge head is thus an attractive option for tube and pipe manufacturers for a final quality control at the end of the line.

Depending on customer requirements, SIKORA offers flexible solutions from 2 to 12 measuring axes. The SIKORA sales team has developed its own tool for this purpose, which calculates how many measuring axes are required for a 100 % surface detection. In a customer meeting the calculation is done together to determine the best solution for the customer.

SIKORA AG
Bruchweide 2, 28307 Bremen, Germany
www.sikora.net

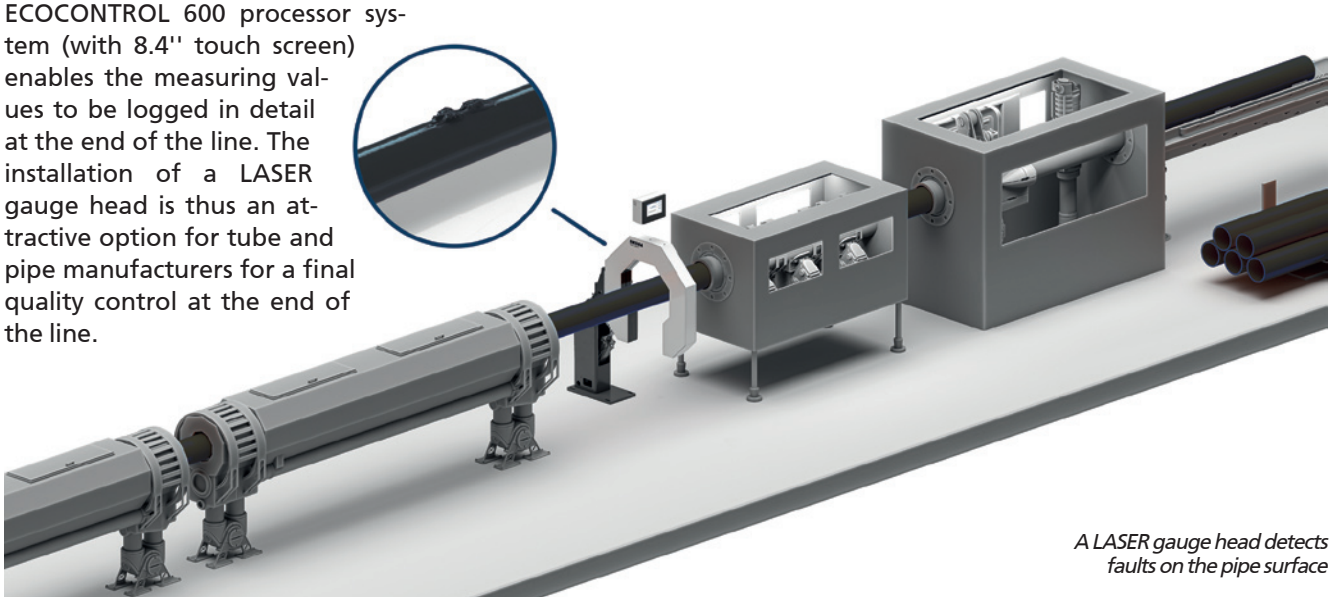

A LASER gauge head detects faults on the pipe surface

EFSA-Compliant Process Produces Food-Safe Sheet from PET Recyclate

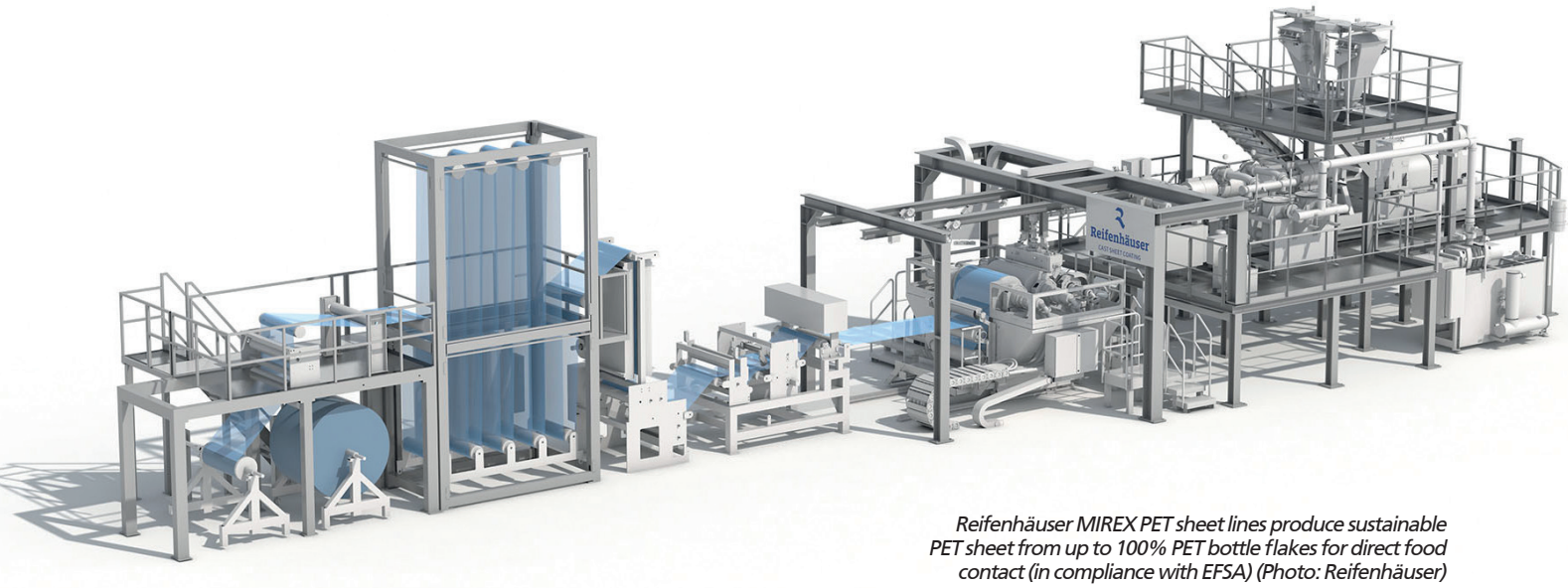

Reifenhäuser MIREX PET sheet lines produce sustainable PET sheet from up to 100% PET bottle flakes for direct food contact (in compliance with EFSA) (Photo: Reifenhäuser)

Reifenhäuser Cast Sheet Coating – the Reifenhäuser Group's business unit specializing in cast film, sheet extrusion, and extrusion coating lines – has developed a particularly efficient production process that allows PET recyclate to be processed directly into food-safe sheet without an upstream drying process.

If recycled material comes into direct contact with food, it requires special certification from the European Food and Safety Authority (EFSA). Up to now, the production of sheet for food packaging of this type has been very laborious and complicated. Reifenhäuser MIREX PET lines now simplify the task for processors. By using a co-rotating twin-screw extruder and a specially developed high-performance vacuum system, the certified process allows PET recycling material to be processed directly without pretreatment and predrying – processes that are usually required. Processors then save their investment in an extra line component and avoid additional energy and maintenance costs. It also allows for quick material and product changes, for example from post-consumer PET bottle flake (PCR) to post-industrial PET production waste (PIR) or to virgin PET. The end product, such as a meat tray, then meets extremely high hygiene standards and is EFSA-compliant for use in direct contact with food.

Reifenhäuser Cast Sheet Coating supports customers during the certification process with the competent authorities. This includes the cleaning process of the flake material, quality monitoring of the feed material, and production under the criteria defined by EFSA.

Another feature is the automatic documentation of relevant production data. EFSA audits require recipe- and product-related data from the certified process to be stored for several years. The ExtrusionOS Production Compliance software bundle was specially developed to monitor and securely document production processes and compliance with EFSA-related thresholds in a real-time database. A live dashboard provides a transparent display of ongoing production and thresholds, permitting rapid response to anomalies. ExtrusionOS Production Compliance is based on Reifenhäuser's connectivity solution ExtrusionOS Core & c.Hub Middleware. It can also be retrofitted to existing lines.

Via ExtrusionOS production data can also be transferred to a digital product passport - for example, via the open R-Cycle standard. Digital product passports are data records clearly linked to preliminary and end products that contain specific data on the materials, ingredients, and utilization of the product. Specific markings allow their use for data-based and therefore more precise waste sorting and recycling processes, among other things.

Reifenhäuser Cast Sheet Coating GmbH & Co. KG
Spicher Str. 46 53844 Troisdorf, Germany
https://reifenhauser.com/de/unternehmen/reifenhauser-gruppe/cast-sheet-coating

Push Tab® blister Lid Launched

Marco Hilty, Huhtamaki

Tobias Fackler, Huhtamaki

Huhtamaki, a key global provider of sustainable packaging solutions, announced a first-to-market sustainable innovation for the global pharmaceutical and healthcare industry. Huhtamaki's Push Tab® blister lid is mono-material PET and free from aluminum. It is designed to meet the stringent safety requirements of highly regulated pharmaceutical and healthcare packaging and provides the industry with a more sustainable alternative to traditional push-through blister packaging.

This game changing innovation will help deliver sustainable packaging solutions for the growing global healthcare industry, whilst importantly maintaining functionality and efficiency, as Push Tab® blister lid runs on existing blister packaging lines without compromising on speed.

The Huhtamaki Push Tab® blister lid is made of mono-material PET (polyethylene terephthalate) which significantly improves recyclability of the packaging, whilst remaining compatible with existing high performance blister packaging lines, without needing modifications or extra investment. Huhtamaki and its partner – Klöckner Pentaplast – bring this first-to-market innovation to help the global healthcare and pharmaceutical sector meet their sustainability targets and achieve market growth at the same time. In 2021, European packaging sales in the healthcare category had an estimated value of EUR 1.4 billion, of which approximately 50% were in blister packaging.

"We are proud to partner with Klöckner Pentaplast to bring Push Tab® blister lid to market and continue to shape the sustainable future of pharmaceutical and flexible packaging. This innovation is designed as part of our blueloop platform, enabling us to speed up innovation and improve circularity in high-performance flexible packaging solutions. We are working hard to turn all our products into mono-material fully recyclable structures. In addition, we are collaborating with partners across the value chain to deliver innovation that helps ensure that ambitious sustainability targets around the globe can be met," says Marco Hilty, President, Flexible Packaging at Huhtamaki.

"The pharmaceutical industry is proactively searching for sustainable packaging solutions that enable recyclability. Since blister packaging traditionally contains multiple materials, it is difficult to recycle them in a single recycling stream. Push Tab® blister lid solves this problem because it is made of mono PET. Push Tab® runs on existing blister packaging lines and is a plug-and-play solution, which means no additional investment is needed for our customers. This newly developed unique technology makes PET based lid film pushable and secures easy access to the tablet for the consumer," says Tobias Fackler, Senior Manager of the Healthcare Business Unit at Huhtamaki Flexible Packaging.

Huhtamaki
www.huhtamaki.com
www.huhtamaki.com/en/pushtab
www.huhtamaki.com/en/blueloop/

Klöckner Pentaplast
www.kpfilms.com/en/

Another Life for Used FFP2 Face Masks

Borealis, one of the world's leading providers of advanced and circular polyolefin solutions and a European market leader in base chemicals and fertilizers; and the Grabher Group, a leading manufacturer of high-tech textiles, are accelerating plastics circularity in a partnership that safeguards human health while helping minimise waste. The key component of the high-quality, filtrating face masks produced by Grabher in Austria is made of fully recyclable meltblown polypropylene (PP) supplied by Borealis. To further drive circularity, Grabher has initiated a novel collect-and-recycle scheme for used face masks which turns them into new value-added products such as oil absorption fabrics.

Plastics circularity "made in Austria" through collaboration and innovation

The Vorarlberg, Austria-based Grabher Group is a leading expert in nano-air and micro-liquid filtration and designs smart-textile systems for the manufacture of medical and healthcare products, among others. As the COVID-19 pandemic hit in early 2020, shortages of personal protective equipment (PPE) in Austria were imminent. Grabher acted by becoming the first Austrian company to establish a dedicated face mask assembly facility which included a state-of-the-art meltblown production system for the manufacture of high-quality face masks. These certified masks, including FFP2 filtration respirators, medical masks, and washable community masks, are marketed by Vprotect, a 100%-owned member of the Grabher Group. One essential component of the Vprotect masks – the filter made of densely spaced micron-sized fibres – is made of meltblown PP supplied by Borealis, a material which itself is fully recyclable.

Yet for obvious health reasons, even high-quality and more sustainable face masks are quickly disposed of. Far too many find their way into landfills or even natural environments. To combat the problem of growing volumes of mask waste, Grabher again took action by creating a new return and collection system for used masks in order to recycle them into new, value-added products. The scheme, which is to be rolled out across Austria in the near future, features clearly marked collection boxes into which all types of face masks may be deposited. After sorting, washing, sterilising and drying,

The key component of the high-quality, filtrating face masks produced by Grabher in Austria is made of fully recyclable meltblown polypropylene (PP) supplied by Borealis (Photos: © Grabher)

the material is used as filler material for cushion and oil absorption applications. Development is currently ongoing to process the masks into granulate which may be turned into absorption fabrics using the meltblown process. These recycled fabrics may be used to absorb oil – for example due to a spill – or other liquids.

"Our partnership with Grabher is the embodiment of EverMinds circular thinking," claims Vedran Kujundzic, Borealis Vice President Commercial Performance Materials. "Using our fully recyclable meltblown PP to manufacture high-quality masks helps protect human health, and finding a way to use them again protects our planet. Together, Borealis and Grabher have taken yet another step to closing the loop on plastics circularity by maintaining our focus on sustainable solutions which benefit society."

"We are proud to have responded so quickly to the urgent need for PPE and FFP2 masks, in particular, at the start of the pandemic in Austria," says Günter Grabher, Managing Director of the Grabher Group. "In the meantime, we are gratified that our collect-and-recycle initiative continues to attract numerous other participants, including OMV, a major food retail group, and several large hospitals. In Borealis, we have found a reliable partner who shares our commitment to both innovation and sustainability, and we look forward to continued collaboration."

Borealis AG
www.borealisgroup.com

Grabher-Group GmbH
www.grabher-group.company

Innovative Extrusion Technologies for the Closed Recycling Loop

Machine components for plant retrofits and turnkey solutions for recycling applications

Extrusion line with Extruder MRSjump with Vacuum Unit, Rotary Melt Filter RSFgenius and Online Viscometer VIS

Gneuss Processing Unit (GPU) with unmatched degassing and decontamination performance

With the Gneuss Process Unit (GPU), a well-established concept is available which has proven itself many times over in the recycling of plastic waste, both in the post-consumer sector and for industrial waste. Due to the highly efficient degassing performance, pre-drying of the material can be dispensed with, even in PET recycling processes.

A Gneuss Processing Unit consists of a Gneuss MRS extruder with its unmatched devolatilization and decontamination performance in combination with a highly-efficient Gneuss Rotary Filtration System and an online viscometer VIS for intelligent dynamic viscosity control.

Although originally developed specifically for PET, the MRS is now also running in polyolefin, polyamide, polylactam and polystyrene applications, other materials and applications are being tested. The dispersion of additives such as fibers or smallest particles in plastic melts or the blending of different types of plastics are becoming increasingly important fields of applications for this technology.

Based on a conventional single screw extruder, the Multi Rotation Section is a drum containing eight satellite single screws, driven by a ring gear and pinion transmission. The "barrels" cut into the drum are wide open and provide optimum exposure of the melt. With a vacuum down to 1mbar and thanks to the very intensive surface exchange in the multi rotation section, contaminants such as adhesives, foreign polymers, monomers and other short-chained molecules as well as volatile components can be efficiently removed.

The patented MRS Technology allows intensive, homogeneous, and at the same time gentle mixing of the melt. Despite varying input qualities, the end product is always of a high and constant quality. By avoiding the need for pre-drying, the MRS is an economically efficient alternative to conventional technologies. Further arguments in its favor besides energy savings are the simple and rugged design, small footprint, its ease of operation and low maintenance, processing flexibility and last but not least its excellent melt quality and homogeneity.

A Letter of Non Objection (LNO) from the FDA, EFSA conformity and several local approvals in

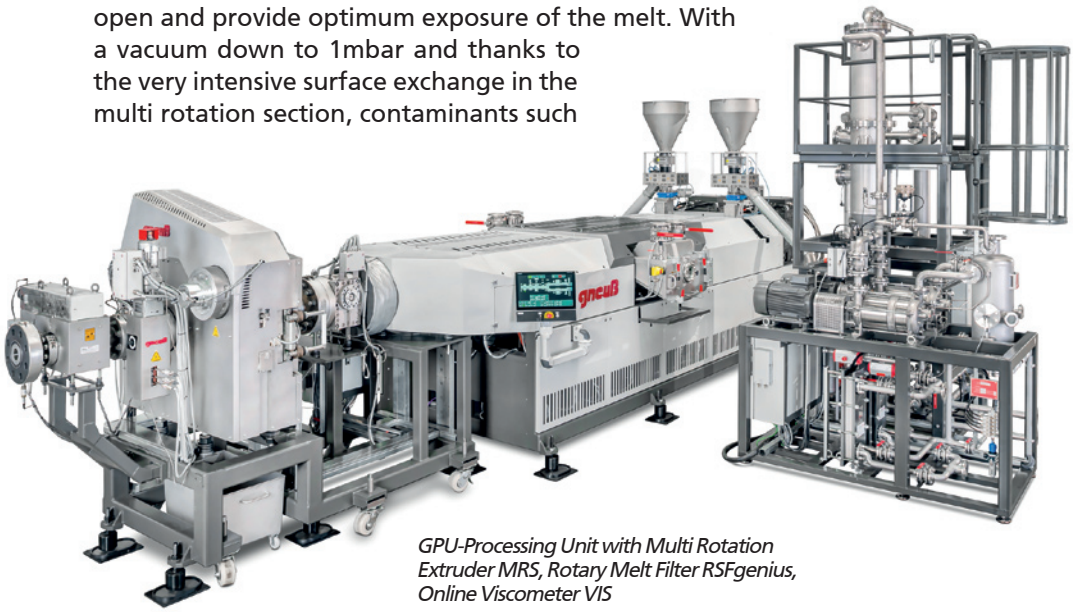

GPU-Processing Unit with Multi Rotation Extruder MRS, Rotary Melt Filter RSFgenius, Online Viscometer VIS

Latin America confirm the decontamination efficiency of this technology.

MRS*jump* Extruder with high surface exchange rate and a viscosity boost in one single extrusion step

With the new MRS*jump* extruder, which is nominated for Plastics Recycling Awards Europe 2022, the MRS screw section has been modified and extended so that, in combination with a vacuum unit developed for this purpose, the viscosity of the polyester can be raised and/or stabilised to the desired level directly in the extrusion step.

The new MRS*jump* version of the extruder dramatically increases the surface exchange rate under vacuum, so that partial polycondensation takes place within the extruder. For the first time, the processing of recycled materials with low or highly fluctuating input viscosities, like post-consumer tray grinds, is possible in only one extrusion step and real upcycling is achieved

The high degassing efficiency of the MRS*jump* Extruder makes it possible to comply with EFSA and FDA limits without time- and cost-intensive upstream or downstream material treatment.

Fast and energy-saving preparation and viscosity increase in the melt phase with the JUMP polyreactor

The JUMP is a compact, quick and efficient alternative to conventional SSP (solid state) systems and enables direct reintroduction of the polymer into the production process without the need to remelt the polymer.

The reactor, which was specially developed for recycling, is installed directly downstream of Gneuss processing unit and the polymer passes over several rotating stirring and conveying elements, creating a polymer film, the surface of which is constantly renewed. The reactor vessel is kept under vacuum, through which volatile substances are reliably removed. By regulating the residence time in the reactor, the vacuum, the fill level and the speed of rotation of the agitating devices, the polycondensation reaction can be altered to achieve the required product properties.

With the IV booster JUMP, the viscosity of polyester is flexibly lifted to the desired level.

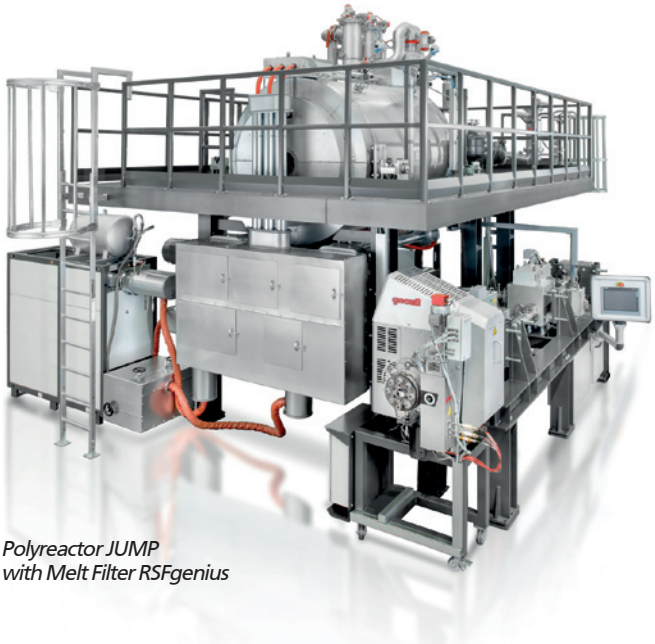

Polyreactor JUMP with Melt Filter RSFgenius

Extended limits for polymer recycling

The extrusion systems MRS and MRS*jump*, the polyreactor JUMP and the Gneuss Rotary Filtration Systems offer a large number of exciting possibilities for recycling many different polymers. Their unique designs circumvent a wide range of restrictions which are encountered with conventional technologies.

Rotary Filtration System RSFgenius on MRS Extruder

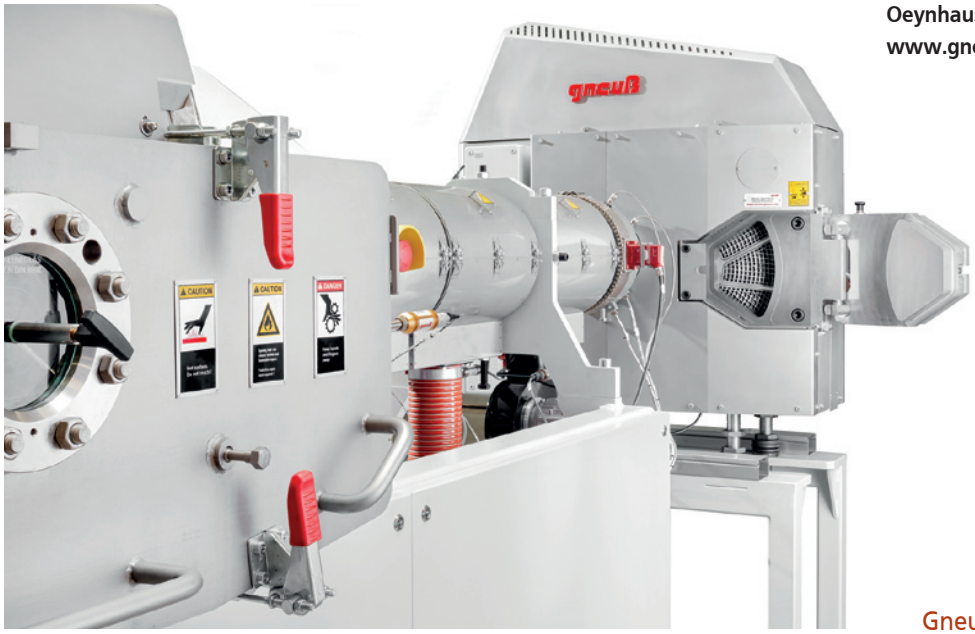

Gneuss Kunststofftechnik GmbH
Mönichhusen 42, 32549 Bad Oeynhausen, Germany
www.gneuss.com

Gneuss at PRSE: Stand A12

Plastic Washing System for National Test Centre

Europe's first independent testing and research centre with facilities on industrial scale, the NTCP (National Test centre Circular Plastics), in the Netherlands, founded in 2018, has set out to examine the behaviour of different plastics during sorting and washing. The goal is to optimise processes quantitatively, qualitatively and with more efficient energy use, in order to promote plastics recycling in line with the circular economy model.

Dutch and foreign clients are already showing great interest in the testing options. "With its modular design, Lindner Washtech's plastic washing system, to be installed in mid-2022, will make a significant contribution to our research and the optimisation of various plastic streams," says Martine Brandsma, director of the NTCP.

Tucked away in Friesland, a northern Dutch province, lies the 50.000-strong community of Heerenveen. Since 2018, it has also been home to the National Test centre Circular Plastics (NTCP). It is Europe's first independent testing and research centre which can analyse heterogeneous plastic waste streams down to the smallest part. Rather than relying on usual test set-ups which are commonly used in research institutions, it is instead equipped with state-of-the-art facilities: raw, industrial, noisy and... using real waste.

Lindner Washtech's complex and state-of-the art modular washing system will be installed in August 2022 and allows for each individual step of the washing process to be examined and quantified in detail. (Copyright Lindner Washtech)

Playing with the Settings

NTCP's concept is actually quite simple: the more plastic that enters the correct sorting stream and then takes the correct route to the relevant mechanical and chemical recyclers, the higher the percentage of plastics that remain in the loop. Though this may sound simple in theory, the reality is more complex. According to Brandsma, "It's like a chess game, played on seven boards all at once – and chess moves are being made on each one." When one applies this to recycling, this means that everyone who takes part in the process – be it the collectors, sorters or recyclers – is in a constant state of development. This means that the system too is constantly changing. In order to examine individual or larger steps in the process, the NTCP has a 25 by 20 metre long, and 9 metre high, industrial sorting system. This simulates the entire sorting process (up to 2 t/h). The modular design allows for settings to be adapted to different testing requirements, which can then be analysed in detail. In this way, one can also test how different sorting techniques interact.

A New Washing System

NTCP's current sorting system takes up half of the thousand square metres of available production space. The other half is reserved for a new washing system, which will be commissioned from and installed by the plastic recycling specialist Lindner Washtech in August 2022. Lindner Washtech's modular system allows for each individual step of the washing process to be examined and quantified in detail. Freek Van Rhijn, technical director of the NTCP says, "Soon we will be able to simulate and optimise the entire washing process for all materials. From shredding, dry washing, cold and hot washing, density separation, mechanical and thermal drying, all the way to separating with a flake sorter. We can also focus on the detergents required and the environmental impact of using more or less water. How does washing by five or ten degrees less affect energy consumption? What ends up in the waste water and how much does it cost to dispose of? With the new washing system, we can examine every single step, from sorting all the way to the final clean plastic flake."

For several months, Van Rhijn has worked closely with Lindner Washtech's engineers to develop the new plastic washing system. Harald Hoffmann, the firm's Managing Director from Großbottwar (Germany), is happy to active-

The colourful building of the NTCP - the first independent Test centre for Circular Plastics in Europe with facilities on industrial scale. (Copyright NTCP)

ly help shape this flagship project. He is convinced that the testing system as a whole will have a huge impact on the recycling industry and is a major leap forward. "The modular system will soon make it possible for different types of plastic to undergo different washing tests. This is made more feasible as the modules can be independently integrated into the process. In addition, the washing modules can be separately adapted to the requirements of each kind of plastic and its degree of contamination. This flexibility creates multiple opportunities for process optimisation at every step of the way, while ensuring high-quality recycled material. This kind of research and testing not only actively contributes to recycling profitability, it also increases the rate of recycling and environmental protection," says Hoffmann.

In addition to supplying the complex washing system, made up of flexible and highly specialised components, Lindner Washtech is also including a universal plastic shredder from its Antares series, as well as a wet granulator. The washing process can be minutely adapted through its different components to suit any kind of input material and its varying degrees of contamination. To this end, a dry cleaner, pre-washer, friction washer or various hot-wash components are also available. The client can choose from various options when it comes to material separation and drying – which can be chosen to develop and design the optimal process for the material at hand. The NTCP system will be equipped with a mechanical dryer, a step dryer, as well as thermal drying specifically for plastic film.

Independent Advice

Since the NTCP is an independent, not-for-profit organisation, it reinvests all its profits, and equally addresses different organisations and stakeholders within the circular plastic recycling chain. Many national and international companies have already expressed an interest in collaborations and partnerships. Freek van Rhijn, who came on board as technical director in October 2019, is not surprised that NTCP has logged so many orders since its inception: "When people come here, they can't believe their eyes. They may have imagined a lab with a few small machines, but this is a real industrial plant. Everyone we speak to sees the benefits of operating at this scale." Orders have come in from a variety of large and small firms, including sorters, recyclers, brand owners, retailers, packers and other stakeholders in the plastic recycling industry. These, alongside international brands, have all approached the NTCP with research and testing requests.

Lindner Washtech also intends to use this facility to further develop its washing components and to test prototypes. "In future, we want to make the most of the NTCP's testing possibilities for our own research and development. We will also ensure that our latest innovations are made available to the NTCP for test runs. Ultimately, the entire plastics industry benefits from testing facilities of this magnitude," says Georg Krenn, Technical Director at Lindner Washtech.

Martine Brandsma, Director of the NTCP, and Freek Van Rhijn, Technical Director, are pleased about the large national and international interest. (Copyright NTCP)

Preferred Testing and Research Partner

The NTCP will continue on its path to achieve the firm goal of increasing the amount of recycled material and accelerating innovation across recycling chains. Director Martine Brandsma even foresees sustainable plastic playing a prominent role across Europe. "We have the ambition to be the preferred partner for testing and research in the field of household waste streams. We are already eighty percent on track to reach our target for 2022. In just a short time, we've already been recognised as an independent partner, with our results being confirmed and accepted on a national and international level. On the one hand, this shows that there is an enormous need for our services. On the other hand, it is a confirmation that we have set up our business model successfully and our projects are achieving great results. We're just a small team here at NTCP, so that's something we are very proud of."

Lindner Washtech GmbH
www.lindner-washtech.com

NTCP (National Test centre Circular Plastics)
https://ntcp.nl/en

Ghost(net)buster in the Netherlands

With commissioning of the Healix recycling center in Maastricht, the Netherlands, founder Marcel Alberts has declared war on so-called Ghost Nets. These are left-over, floating fishing nets and ropes that pollute the world's oceans – which are unfortunately all too familiar from the unforgettable photos of sea turtles or other sea creatures caught up in them. Using state-of-the-art technology for plastics recycling, the aim is to turn this linear waste into a product on site and create a circular economy. At the forefront of the process chain is a WEIMA W5.22 single-shaft shredder with hydraulic drive.

First back to 2020, the year Healix was founded. The visionary Marcel Alberts was increasingly aware of the marine plastic problem and decided to do something about it. As he later quotes himself at the opening, it is time to "Stop talking, start doing." The smart entrepreneur from Maastricht previously gained two decades of valuable experience in the fiber and textile industry, which he can use to his advantage for his project that is very close to his heart.

His idea is both simple and ambitious: Collecting discarded and broken nets, ropes and cords from fishing and farming to recycle them. Unfortunately, there are more than enough of them. Healix states that ghost nets account for at least 30 percent of the great pacific garbage patch. That's the size of France – times three.

Abandoned plastic fibers, mostly PP and HDPE, procured from national collection centers are used to create something new. The plastic waste includes fishing nets, packaging products such as big bags, ropes, particularly tear-resistant yarn and other fiber-based materials from the agricultural industry.

Danger for marine wildlife: ghost nets

Healix relies on state-of-the-art recycling technology to ensure that the closed loop and production of rPP and rHDPE granulate works perfectly. In the brand-new production halls, a WEIMA W5.22 single-shaft shredder with a working width of 2,200 mm is used for the first step of shredding. It is equipped with a powerful hydraulic drive from Hägglunds Bosch Rexroth. The steel colossus, which weighs just under 12 tonnes, also has a generous maintenance access that makes getting to the interior of the rotor easy. Alberts remembers: "When I was researching suitable shredders on the internet, I quickly became aware of WEIMA and also saw videos about the size reduction of nets and big bags. At the same time, I asked around within my network. What can I say? WEIMA

Extruded plastic scrap

Recycled Healix bottles

Baled ghost nets

Healix opening with Frans Timmermans

simply has an excellent reputation in the industry. That's why I contacted WEIMA in Germany."

The project was further advanced in cooperation with WEIMA Sales Director Patrick Henzler. Alberts opted for the W5.22 and today draws a positive conclusion: "It all starts with the shredder. If it isn't robust and reliable, all the subsequent production steps suffer. We run the WEIMA shredder continuously over three shifts. The result is ideal for subsequent washing, drying and extrusion. Precise cut length and uniform pieces are very important to us. I believe we made the right decision with the WEIMA shredder."

Not even two years passed from the original idea to commissioning of the recycling center. According to Healix, the investment amount was around ten million EUR. A true flagship start-up that even Frans Timmermans became aware of in his role as Green Deal Climate Commissioner. He therefore attended the opening as a special guest.

Albert's goal of annually transforming up to 6,000 tons of marine plastic into regranulate with Healix is also a signal towards the rest of the economy and society. With a great deal of courage, commitment and the right technology partners, we have come a little closer to the dream of a circular economy and a climate-neutral continent.

WEIMA Maschinenbau GmbH
Bustadt 6–10, 74360 Ilsfeld, Germany
www.weima.com

Old vs. recycled ropes

Customized Production Lines for High-Tech Compounds

Against the background of the booming e-mobility industry in China, the demand for high-tech compounds used in light-weight applications grows continuously. Reason enough for the chemical group Lanxess to substantially increase its compounding capacities in the People's Republic. Lanxess opted for KraussMaffei Extrusion as the machine supplier for the Changzhou site and benefits from excellent German engineering services combined with efficient on-site support provided by KraussMaffei China in Jiaxing.

High-performance turnkey compounding line from KraussMaffei at Lanxess production site in Changzhou

"We have designed, installed and already commissioned a high-performance turnkey compounding line for Lanxess' Chinese production site in Changzhou," explains Dieter Brunner, Key Account Manager at KraussMaffei Extrusion GmbH. He proudly adds that "we have also been awarded the contract for the second line, which is scheduled for delivery in the course of 2022 and will increase the compounding capacity by another 30,000 metric tons per year." Lanxess' goal was to significantly expand production output of the two high-tech Durethan and Pocan plastics in China. With the installation of the second KraussMaffei line, the chemical group will achieve a total annual production capacity of 110,000 metric tons of compounds based on PA 6, PA 66 and PBT at its two sites in Changzhou and Wuxi.

Customized production lines for high-tech compounds

"In the case of the compounding line already in production at Lanxess in China, we were responsible for the complete engineering – starting from the steel structure and all upstream and downstream components right through to the conveying systems to the finished product silos," says Dieter Brunner, who is not only very satisfied with the efficient cooperation with Lanxess but also with the

Lanxess produces PBT and PAcompounds with glass fiber weight fractions between 5 and 60 percent on the compounding lines in Changzhou, China

Lanxess is responding to the increasing demand for PA 6, PA 66 and PBT from the Chinese e-mobility industry with the capacity expansion

Commissioning of the KraussMaffei compounding line at Lanxess' Chinese production site in Changzhou has now been completed

excellent support provided by his Chinese colleagues. "This project is an impressive example of the fruitful cooperation between KraussMaffei Extrusion in Hannover and our Chinese colleagues, especially against the background of fast local response times, cultural differences and language barriers." The first compounding line delivered by KraussMaffei is equipped with a ZE 110 UT twin-screw extruderIn the case of the second line, again a package solution, Lanxess opted for a ZE 98 twin-screw extruder from the BluePower series. The decision in favor of the ZE BluePower extruder was made after having carried out compounding tests with specific Lanxess material formulations at KraussMaffei's R & D center in Hannover. Dieter Brunner and his team are extremely pleased that "the extraordinary compounding results as well as the unparalleled extruder performance combined with low energy consumption convinced Lanxess to choose the ZE Blue Power solution".

Ideally prepared for the production of different compounds

On the lines supplied by KraussMaffei Extrusion, Lanxess produces PBT and PA compounds with a glass fiber weight percentage ranging between 5 and 60 %. These compounds are mainly used in the booming Chinese e-mobility industry. An optimized set of screws is available for each of the two matrix materials – polyester and polyamide – which only needs to be exchanged in the event of a production changeover thus minimizing set-up times. Just like the first production line, the second line will also be provided with an optimized wear protection as well as with versatile metering stations, side feeders and degassing units, so that a wide variety of formulations can be processed without any problems.

KraussMaffei Extrusion GmbH
An der Breiten Wiese 3–5,
30625 Hannover, Germany
www.kraussmaffei.com

Laser Measurement of Tubes and Extruder Bore Holes

Using the Circular Triangulation Sensor (CiTriS, see picture 1), the inner geometry of bores, tubes, tanks, and other cavities can be measured. The radial laser beam measures the inner geometry around 360° in 3600 angle steps. The result is a precise inner cross section, and a 3D-model of the inner surface profile can be generated from the data obtained. Using this technology, the verification of tolerances is possible.

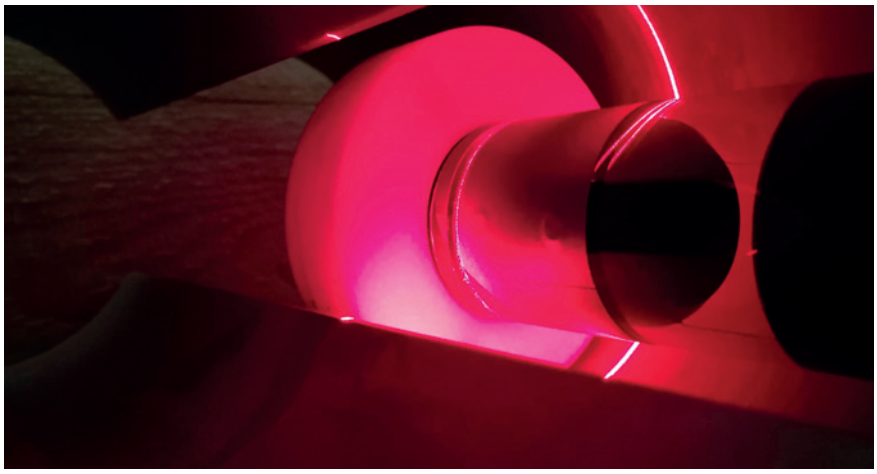

The sensor, which has no rotating parts, projects a 360° radial laser beam on the target inner surface and measures the contour. The projected laser line is imaged by a high-resolution image sensor. Using image analysis, the 2D contour of the cross section is created. In a single scan 3600 radii along the circumference are measured with a speed of up to 60 scans per second. The resultant radial resolution is 10µm.

Operating at 60 scans per second, a 10 m tube can be inspected in 180 seconds with over 10000 cross sections. More than 38 million measurement points provide a detailed surface inspection.

Picture 1: Circular Triangulation Sensor (CiTriS)

Operation in extruders

Extruder bore holes are subject to wear and need regular inspection. The CiTriS scanner can be inserted at any required depth (Picture 2) and will measure the related cross section. Guiding sleeves or round guiding brushes are used to maintain the aspect and centralise the sensor. The sensor should be easily moveable along the length of the tube. Exact centring is not required because of the wide radial measurement range of the sensor. The smallest sensor has a length of 169mm and measures a range of diameters from 60mm to 160mm. Larger sensors measure ranges up to 1000 mm. Smaller measurement ranges are in development.

Depth determination

To correlate the measured cross sections with the distance of the scanner inside the extruder , a distance signal is used to trigger sensor measurement.

The distance signal can be produced by an encoder. Each movement of the sensor will trigger a cross sectional measurement. The integration of the encoder with the scanner is dependent upon the deployment method of the scanner.

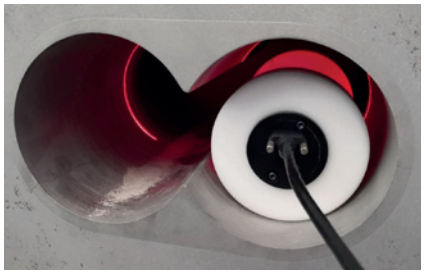

Picture 2: Operation in a double extruder

When mounting the CiTriS on a roller skid, the encoder can be mounted on a measuring wheel. In the case of small-bore holes and operation with sliding sleeves, the cable length inserted into the bore hole will be measured for information on distance. A special cable guide with integrated encoder is available.

Picture 3: 3D-Model of a bore in a double screw extruder showing significant wear. The depth of wear is shown in scaled colour

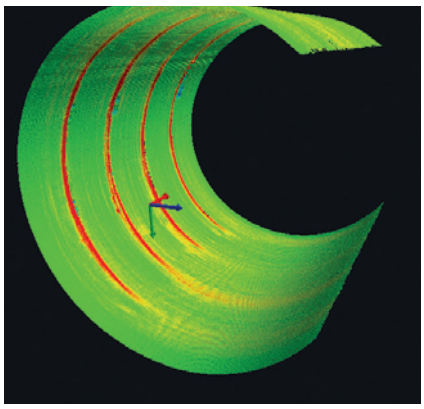

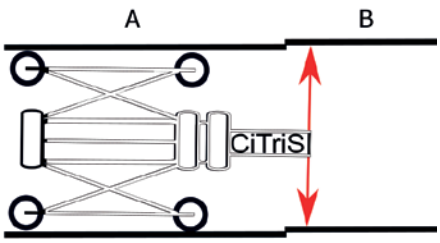

Picture 4: Measurement of the offset from element A to element B with CiTriS

In the case of mounting the CiTriS on a lance, which is inserted into the bore, the encoder will be mounted directly on the on the lance guide.

3D–measurement

By using this additional information, software can assemble all cross sections with precise depth information to create a point cloud of the inner surface of the bore. The result is a complete 3D-model of the bore. The complete model can be dimensioned and analysed, with the ability to highlight and dimension defects. For the application of third party external 3D analysis software, STL-export is available.

Picture 3 shows a worn extruder bore with local grooves in colour scaled display.

Collinearity and straightness determination

The collinearity of the extruder elements describes a misalignment between the individual elements.

In order to measure such an offset, CiTriS is mounted on a roller slide peeping out. At the transition between two elements A and B (Picture 4), the centering should take place in element A and the measurement in element B.

By fitting a circle to the measured data of CiTriS, an offset can be calculated. This value changes suddenly as soon as the measuring plane of CiTriS has been moved from element A to element B.

To determine the straightness of an extruder bore, an additional point laser is radiated through the extruder elements from the opposite bore opening as a benchmark.

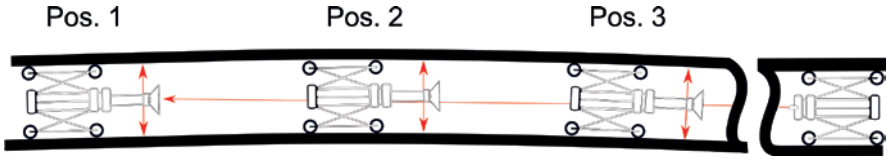

Picture 5: Straigtness measurement

CiTriS will be guided slidable and approximately centrical, e.g.mounted on a roller carriage, into the bore opening.

A module consisting of a camera and a focusing screen is attached to the front of the CiTriS to detect the directional laser.

The laser beam serves as an absolutely straight reference line. The detection unit is moved along this reference line in the pipe. Here, the offset to the reference line is continuously measured by the local detection of the laser point on the screen. A possible displacement of the detection unit from the center of the bore hole can be corrected using the measurement values from CiTriS. (Picture 5)

The result provides the offset of the center point of the respective bore cross-section to the reference line at each measurement position. This corresponds to the straightness of the extruder bore.

With this structure, a possible misalignment of individual extruder elements in relation to one another becomes visible due to a jump in the coordinates when the roller carriage transits from one extruder element to the next. This corresponds to the collinearity of the extruder elements to each other.

Measurement in tubes

For tube inspection, 2D analysis software is already available. The Inspection output are radii, ovality, minimum internal diameter, maximum internal diameter and tolerances. Using an external measurement stand, or a centraliser inserted into the tube, the analysis is possible over the total length of the tube. For 3D inspection of the tube end a special scanner is available which moves the sensor up to 300 mm into the tube and inspects the tube end completely from the inside (see picture 6). Tube diameter, ovality and dents will be measured. A special feature is the measurement of the pipe end cut geometry and the weld seam profile (cut geometry is important for tubes that will be welded together).

Picture 6: 3D Crawler

Picture 7: 3D Tube inspector

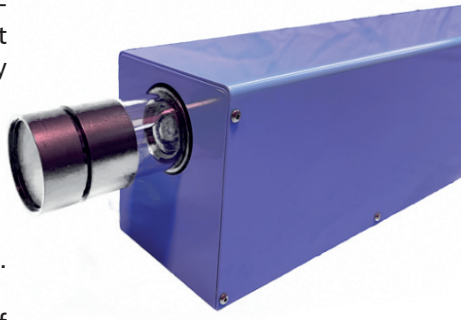

For the complete scan of tubes, a crawler with integrated CiTriS is available (see picture 7). The crawler propelled scanner moves through the complete tube and checks the inner surface for defects. Additional features for tube straightness are available.

The standard CiTriS sensors have a diameter of 55.9 mm and radial measurement ranges of 50 mm to 500 mm. The sensor has a USB-3-interface for 5V-power supply and data interface to a computer. The laser class 2M allows applications without any special safety measures. For developers, who would like to integrate the sensor into their own applications, an Application Programming Interface (API) is available.

GL Messtechnik GmbH
Industriestr. 3–5, 55595 Hargesheim, Germany
www.gl-messtechnik.de

Recycling Technology from Austria for Australia's Largest PET Recycling Plant

The recently opened Circular Plastics Australia PET recycling facility in Albury-Wodonga, New South Wales, is equipped with a recoSTAR PET 215 HC iV+ PET bottle-to-bottle recycling line from Starlinger that produces 2.5 tons of rPET per hour. Circular Plastics Australia (PET) is a joint venture partnership between Pact Group, Cleanaway Waste Management Ltd, Asahi Beverages, and Coca-Cola Europacific Partners (CCEP) aiming to create a circular economy for PET beverage and food packaging.

The rPET pellets will be used for producing new food and beverage packages – a perfect example of a functioning circular packaging system (©Starlinger)

The newly installed recoSTAR PET 215 HC iV+ at the Albury-Wodonga facility turns post-consumer PET flakes into food-contact rPET pellets, starting with a two-stage heating and drying process of the hot-washed flakes for optimum preparation for the extrusion process. After extrusion, thorough filtering and underwater pelletising, the produced rPET pellets undergo vacuum treatment in the downstream SSP reactors for IV increase and highly effective decontamination that readies the pellets for food-contact applications.

Joining forces to close the loop

Circular Plastics Australia (CPA) plans to recycle 30,000 tonnes of post-consumer PET collected via container deposit schemes and kerbside recycling each year and use the food-grade rPET pellets as raw material to produce new beverage bottles and other food and beverage packaging. Each member of the joint venture provides its knowledge and expertise in the project: Cleanaway supplies the plastic to be recycled through its collection and sorting network, Pact operates the facility and provides technical and packaging expertise, while Asahi Beverages, CCEP and Pact buy the recycled plastic from the facility to use in their packaging. The output of the Albury-Wodonga plant will help to increase the amount of locally sourced and recycled PET by two thirds from around 30,000 tonnes to over 50,000 tonnes p.a. and reduce Australia's reliance on virgin plastic and recycled plastic imports.

The CPA Albury-Wodonga facility was supported by an AUD 5 million grant through the New South Wales Government's "Waste Less, Recycle More" initiative, with the support of the Australian Government's Recycling Modernisation Fund.

Vacuum treatment in the viscoSTAR SSP reactors for IV increase and decontamination makes the recycled PET safe for food-contact packaging (©CPA)

"This joint venture is a major achievement and sets precedence", said Paul Niedl, Commercial Head of Starlinger recycling technology. "We feel proud that we can support Circular Plastics Australia with our know-how and technology in their commitment to sustainability and help to establish a closed-loop system for plastic packaging in Australia."

Pact's Managing Director and CEO, Sanjay Dayal, said: "The opening of this state-of-the-art facility in Albury-Wodonga is a game changer for Australia's plastic recycling industry. Working together with our partners, this facility creates a true circular economy by recycling and manufacturing PET beverage bottles and food packaging here in Australia without the need to import plastic material from overseas."

CPA is building a second PET recycling facility in Altona North in Melbourne, Victoria, which will be equipped with a Starlinger recoSTAR PET 330 HC iV+ recycling line featuring the largest SSP reactor currently installed worldwide. It will have the capacity to recycle the equivalent of around one billion PET beverage bottles each year.

Starlinger & Co Ges.m.b.H.
Starlinger recycling technology
www.recycling.starlinger.com

Reduced Energy Consumption in Honeycomb Production by up to 65 Percent and Double Capacity

EconCore, the world leader in technologies for economic honeycomb sandwich production and ThermHex Waben, producer of polypropylene honeycomb cores for lightweight sandwich panels and composites, have doubled capacity in the production of honeycomb cores, with reduced energy consumption by up to 65% compared to alternative solutions. The two companies recently installed MEAF H-Series extruders within their state-of-the-art production facilities.

ThermHex Waben installed their first MEAF extruder in 2015, the 75-H34. Impressing with its results and durability, in November 2021 the company invested in a second MEAF extruder to work alongside their existing one, another 75-75 mm and a 34:1 L/D-ratio screw.

Fitted with special features to connect the two extruders and by combining both production streams ThermHex Waben was able to double capacity and with most efficient energy usage. They have increased their theoretical capacity in production honeycomb cores from 500 kg to 1000 kg per hour, which is equivalent to 3,000 tonnes per year in two-shift production.

MEAF extruders offer a significant sheet extrusion line energy efficiency over its competition, in a di-

rect comparison MEAF's 75-H34 extruder, as used by ThermHex Waben, recorded 0.18 to 0.22 kW/kg, a significant saving over a competitor of MEAF's 0.50 kW/kg. Besides the substantial energy savings (10 to 65% less energy per produced kilogram of product required), the MEAF H-series extruders are suitable to extrude multiple materials with same screw and barrel, reduced polymer degradation due to low friction extruder design as well as minimal flow and pressure fluctuations, even at higher outputs.

ThermHex Waben's parent company EconCore introduced its first MEAF's 50-customized 75-H34 extruder for their pilot line in 2017, which features the same screw ratio but a smaller barrel and customized features compared to the ThermHex MEAF lab extruder. In view of more profound industrial scale-up activities for their new rPET honeycomb core, EconCore needed an additional larger industrial scale extruder with a compact design so that it could fit within their technology lab environment upscaled demonstration line. It also needed to efficiently handle RPET flakes and a range of engineered polymers used in the production of RPET and HPT (high performance thermoplastic) honeycomb cores. The 75-H34 offered this and retained the same screw ratio, barrel, and customized features as their previous extruder. EconCore's RPET honeycomb, using recycled post-consumer PET flakes, offers a sustainable source which doesn't compromise on mechanical benefits. And the energy efficiency of the MEAF extruder was another reason for EconCore to choose the extruder over any other. This resonated strongly with the company's focus on sustainable production as well as sustainable materials.

One issue faced by EconCore when searching for the right extruder was their temperature ranges for high performance polymers like PEI. More. For polypropylene, more conventional extruders typically offer a temperature range of 80 C to 300 C. However, this was too low and MEAF's extruder was capable of offering a higher temperature range from 200 C to 400 C, fulfilling the requirements to extrude RPET and a certain range of engineered polymers.

Wouter Winant, technical manager at EconCore said "We required an extruder that offered a high temperature range, the customized 75-H34 extruder offers a temperature range PEI of 200-400 C whereas more standard, conventional extruders are typically limited to 300 C. With MEAF being based locally to EconCore it enabled a seamless installation process for the 75-H34 extruder."

Dr. Jochen Pflug, CEO of both EconCore and ThermHex Waben, added, "The demand for more sustainable, lightweight, high rigidity materials are constantly growing and to cope with the influx of demand it is important for ThermHex Waben to grow our production capabilities. MEAF's 75-H34 extruder has allowed us to expand production capacity significantly."

EconCore were recently nominated for the Belgian Business Awards for the Environment in recognition of their rPET honeycomb technology. In August 2021 Econcore's rPET honeycomb core technology was accredited with the prestigious Solar impulse Label in recognition of the materials sustainability. ThermHex Waben was also in the headlines recently as they were announced in the Top 100 most innovative companies in Germany.

EconCore
https://econcore.com/en/

ThermHex Waben GmbH
https://thermhex.com/de/wabenplatten/

MEAF Machines B.V.
www.meaf.com

Flawless Granulates for the Highest Optical Requirements

Around 12,000 tonnes per year of sorted granulates leave the new granulate sorting centre of SORTCO in Niederzissen/Germany. "With innovative mechanical and optoelectronic sorting systems, we guarantee the highest granulate purities and our special know-how enables us to meet the highest quality requirements of our clients" introduces managing director Lars Ruttmann the service of his company, which has its headquarters in Hamburg. "The goal is the safe and reliable sorting out of unavoidable impurities that could lead to machine downtime, expensive repairs of tools and hot runner systems and cause complaints and image damage during subsequent processing."

Material feed into the sorting line (All pictures: ©Sortco GmbH & Co. KG)

Lars Ruttmann, General Manager of SORTCO GmbH & Co. KG: "We can sort average goods with high contamination rates as well as reliably detect and discharge small amounts of contamination in granulate batches."

Stips, burns, greying, and black specks cannot be avoided in the production of compounds and pellets. Even though the number of defects is usually low, these small defects can have a major negative impact on the production of particularly cost-intensive or sensitive components. Rejects are the result, which is annoying and expensive, and highly unecological, just like an unnecessary waste of energy and personnel costs.

The granules are randomly tested in SORTCOs laboratory for final quality control following sorting. The laboratory testing system is far superior to the human eye and immediately identifies all colour deviations from a size of 50 µm

Sortco offers its sorting service to prevent such problems. The order size can vary from 1 tonne to several 100 tonnes. "We can sort average goods with high contamination rates as well as reliably detect and discharge small amounts of contamination in granulate batches," Lars Ruttmann points to a wide range of applications.

After all, he relies on state-of-the-art detection and sorting technology at his new company location in Niederzissen. In addition to mechanical separation systems such as dust collectors and metal separators, various optoelectronic sorting systems ensure the best results. Colour deviations from a size of 50 x 50 µm can be detected and removed in any free-flowing granulate. The result is a virtually defect-free granulate that the customer can choose to receive back in sacks, octabins, or big bags and use in any application without any problems.

On the right, a sample of the contaminated granulate before the sorting process; on the left, the same material after the sorting process

Many customers, mostly international plastics producers and compounders have long since placed their trust in Sortco's expertise and can thus in turn provide their customers, the plastics processors, with the highest degree of safety for component production. A classic win-win situation that is both economical and resource-saving.

SORTCO GmbH & Co. KG
Schnackenburgallee 179, 22525 Hamburg, Germany
sortco.de

TH1NK OU7S1D3 7H3 BOX

Approaching projects in new and innovative ways...

Approaching projects in new and innovative ways; conceptualizing problems differently; and understanding a position in relation to any particular situation in a way never thought before are the basis of the companies that want to stay relevant and inventive. Starting from our customer's experience and working backwards to technology, Tecnomatic partnerships all the pipes companies, which are aiming at development and leadership, cultivating the ability to look at things differently from the common thinking.

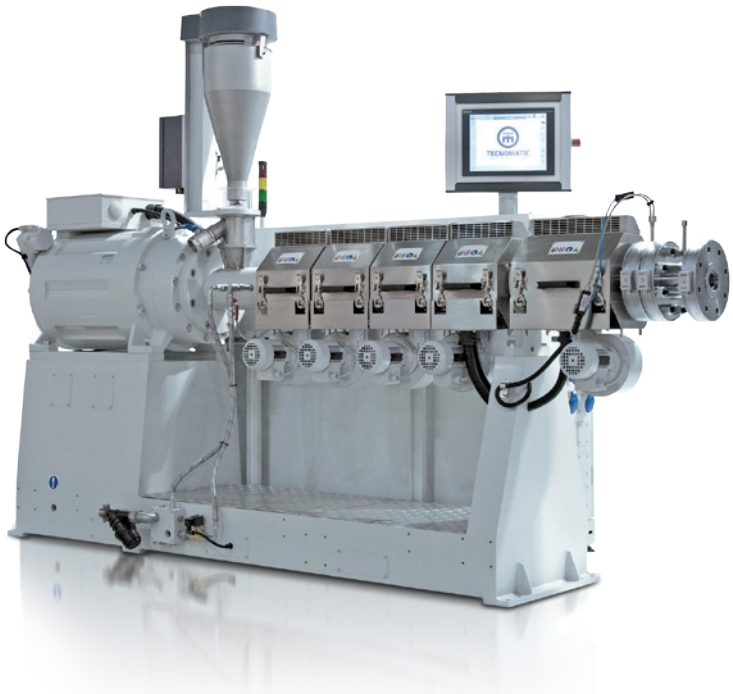

TECNOMATIC

TECHNOLOGIES FOR PLASTIC PIPES PROCESSING

Tecnomatic Srl | Bergamo | Italy | tel. +39 035 310375 | tecnomaticsrl.net